Rise and Fall of Remote Labs: Or perhaps not?

José Manuel Martins Ferreira, Olaf Hallan Graven
Buskerud and Vestfold University College, Postboks 235, 3603 Kongsberg, Norway

***Abstract* — Offering Internet access to laboratory workbenches became trendy in the early years of the last decade [1,2]. Remote labs, in opposition to real labs, are frequently regarded as an extension of e-learning platforms, offering the advantages of online access to an area where educational practices remained largely unchanged since pre-e-learning times. This vision has frequently led many technology enthusiasts to jump ahead of pedagogical concerns, and explains why it is possible to find many remote labs that offer little or no added value to the teaching and learning process [3:5]. This paper proposes a simple framework to compare remote labs to their main competitors in terms of educational value (real labs, simulation), and offers the authors' views concerning their relative pros and cons for a selected subset of criteria. The paper closes with recommendations for repositioning remote labs in a brand new world of emerging educational technologies and changing educational paradigms.**

***Index Terms* — Remote Laboratories, Simulation, Virtual Laboratories, Science and Engineering.**

I. Introduction

In the context of this work, remote labs are defined as any type of experimental set up that is accessible via the Internet or via an institutional intranet. The term "remote" is therefore not equivalent to "distant", and simply indicates that the user does not handle the experiment directly. In general terms, any workbenches that are accessible via the Internet fit into this category, and indeed this is what correspond to the vast majority of the remote labs that are currently available [6]. Figures 1 and 2 illustrate two remote labs that are available at the Buskerud and Vestfold University College – the first one (figure 1.a) supports remote experiments with DC power supplies, and the second one (figure 1.b) addresses transistor-based circuits. Both are available 24/7 and occupy a tiny space in the corner of a small room (figure 2). The fact that remote labs traditionally have little space requirements, and can be located in non-premium areas inside or even outside of the campus, is worth noticing, and will be referred again during the course of this work.

The growing availability of Internet access worldwide, and the development of hardware and software tools that enable the quick development of a wide variety of interconnected testing instruments, made it possible to build remotely controllable workbenches that are able to accommodate experiments in many science and technology areas [7,8]. Engineering courses, just to mention a typical example, benefited from remote workbenches that complement classroom lectures and real lab sessions. The joy of offering 24/7 access to resources that were previously locked behind restricted-access laboratory doors greatly contributed to the growing popularity of remote labs. Their rapid expansion, however, also contributed to poor standardization, which greatly affects the potential added value of such systems. Worse than that, pedagogical concerns were frequently left behind, creating a wave of scepticism that overshadows their potential benefits.

This paper offers a reflection on the current situation of remote labs, and proposes a framework to reshape their application domain, in view of a set of criteria that will be individually presented in the next section. A list of priorities to accompany the set up and usage of remote workbenches is then offered in the form of recommendations arising from these criteria, and a final section summarises the main conclusions.

II. Benchmarking

The pros and cons of remote labs, versus their direct competitors (real labs, simulation environments), can be summarised as shown in table 1. Simulation encompasses both stand alone tools and server-based virtual environments, while real labs include all experimental facilities that require the physical presence of the students (be it labs located in the university campus or in industry premises). Table 1 could be expanded further to highlight the differences among these variants, but the results would not be significantly different from the simplified version presented below. Two main requirements were considered to build this table:

- To bring into evidence the dynamic nature of a benchmarking procedure that is greatly affected by technological developments and changing educational paradigms.
- To use a set of comparison criteria that is able to cover all relevant aspects needed to grade their relative performance.

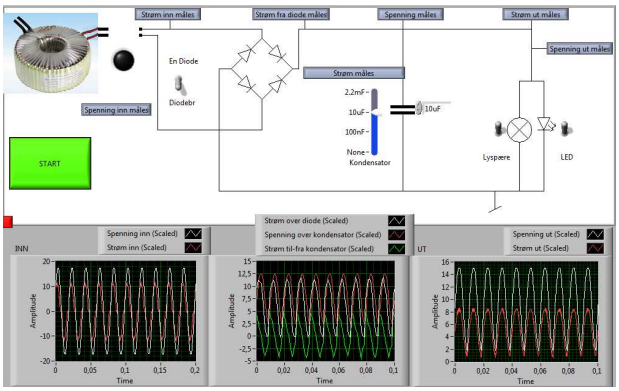

1.a) Remote lab for DC power supplies: User interface.

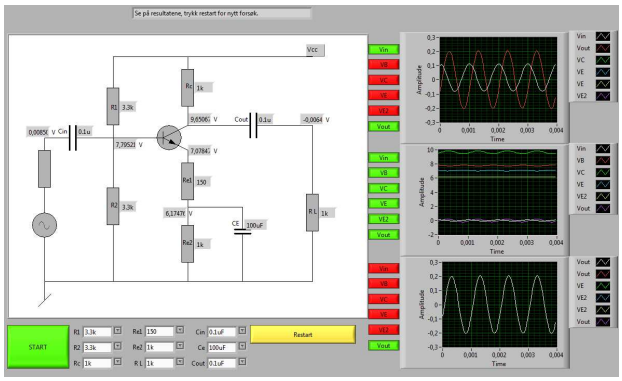

b) Remote lab for transistor-based circuits: User interface.

Figure 1. User interfaces of the remote labs in figure 1.

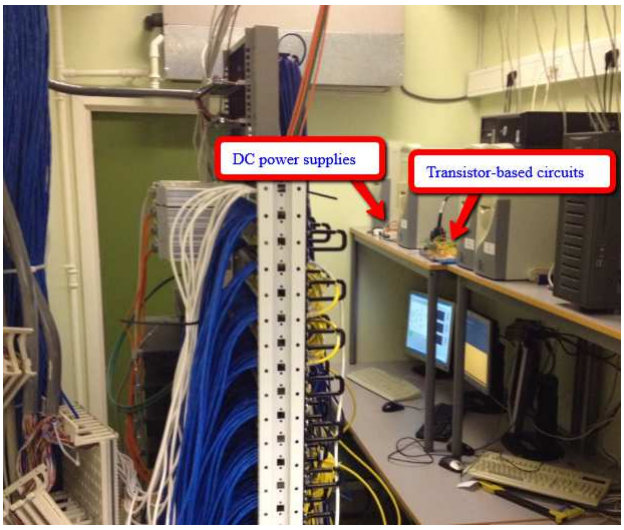

Figure 2. Physical space of the two remote labs.

TABLE I.
BENCHMARKING REMOTE LABS IN RELATION TO REAL LABS AND SIMULATION ENVIRONMENTS.

	Real lab		Simulation	
Comparison criteria against real labs, simulation	Pro	Con	Pro	Con
Representation of reality		3+	3-	
Complexity to set up (instructors point of view)	3+			4-
Scalability	4+			3-
Availability	4+			2-
Accessibility	3+			2-
Institutional networking	3+		4+	
Cost	4+			4-
Maintainability	4+			4-
Pedagogical value		3+		4-

The comparison criteria used in table 1 results from the authors' experience of 15 years and several international projects addressing remote labs in various science and technology areas, with a focus on engineering education (particularly electrical, mechanical, and chemical engineering) [1]. The grading scheme adopted comprises a **scale** (1 to 5, with 5 meaning highest relevance) and an **outlook indicator** (+ means a tendency to improve, - means a tendency to worsen). For example, the grade "Con 4-" that compares remote labs to simulation environments, in relation to the *complexity to set up*, indicates that remote labs are significantly ("4") poorer ("Con") than simulation with this respect, with a tendency to worsen ("-") in the future.

In general terms, table 1 shows that remote labs compare very favorably to real labs, with a tendency to improve their competitive advantages in all favourable criteria. The comparison to simulation environments is however at a disadvantage, and shows a tendency to lose ground in various unfavourable criteria. Moreover, the competitive advantages of remote labs in relation to real labs may become meaningless, if simulation becomes able to replace real labs in a growing number of situations. Any SWOT analysis concerning the future of remote labs must inevitably consider this trend as a threat, meaning that simulation environments may come to replace remote labs in all or at least most application areas where they are currently in use -- the "rise and fall" scenario depicted in the title of this paper may indeed become reality, or "perhaps not", if appropriate repositioning is considered. Each individual criterion used in table 1 will be considered in further detail in the following subsections, with the objective of deriving the recommendations that will be presented before the concluding section.

Representation of reality

(Real labs: Con 3+; Simulation: Pro 3-)

The representation of reality is improving in remote labs through technological enhancements, e.g. haptic feedback, but real labs will continue to be better than remote labs with this respect, because there are experimental features that cannot be conveyed to the students using the technologies that are currently available (e.g. smell, which is representative in areas like chemical engineering). The representation of reality is currently better in remote labs than in simulation, but the sophistication of simulation environments improves faster, meaning that the competitive advantage of remote labs will weaken with this respect.

Complexity to setup

(Real labs: Pro 3+; Simulation: Con 4-)

The additional requirement of Internet connectivity adds little to the complexity of remote labs, whereas their much simpler requirements in terms of space represent a significant advantage over their real lab counterpart. This competitive advantage will become more important in the future, since space costs show a tendency to increase, while connectivity tends to be present by default in most devices and equipment. However, and for the very same reasons, simulation environments perform much better than both real and remote labs with this respect. Moreover, as computing platforms become cheaper and more powerful, remote labs will fare increasingly worse with this respect when compared to simulation environments, be it in terms of space requirements, power demand, etc.

Scalability

(Real labs: Pro 4+, Simulation: Con 3-)

Remote labs are far more scalable than real labs, since their space and power requirements are much smaller.The growing costs of space, and the miniaturization and power saving features of electronics, indicate that this competitive advantage will improve as time passes. However, when compared to simulation environments, the situation is the opposite -- the exponential increase in computational power of inexpensive hardware platforms makes the number of simulation seats virtually unlimited, and even in the case of server-based architectures, it will always be far easier to increase the number of simultaneous users, than in the case of remote labs.

Availability

(Real labs: Pro 4+, Simulation: Con 2-)

The availability of remote labs is necessarily much higher than that of real labs, since most laboratory environments require human supervision and were set up in premises that are not available on a 24/7 basis. Besides, reliability improves as their underlying technologies reach maturity, meaning that downtimes are progressively reduced. However, the same happens with simulation environments, where reliability and availability -- regardless of server or client-based installations -- is essentially related to software/version maturity for each operating system. Moreover, the much higher number of engineering professionals working in software development, in face of those working on hardware development, may be seen as an indicator that the availability of simulation environments will improve at a faster pace than that or remote labs.

Accessibility

(Real labs: Pro 3+, Simulation: Con 2-)

Users with special needs, and particularly students or professionals with vision impairments, are becoming increasingly handicapped in relation to many devices and applications that relegated “design-for-all” principles to the low end of the priority scale. Both remote labs and simulation environments are better off than real labs with this respect, with remote labs faring slightly better than simulation. This problem should be of particular concern to the design community in this area, as the graphical content of user interfaces becomes more and more prevalent, as displaying technologies decrease in cost and increase in availability. The intermediate formats used in many simulation engines may give a competitive advantage to simulation environments, both in their relative positioning to remote labs, and in relation to how easy it may be to accommodate more demanding accessibility requirements.

Institutional networking

(Real labs: Pro 3+, Simulation: Pro 4+)

A growing number of examples can be found in the literature concerning institutional programmes that use remote labs to network at various levels, from research in technological and pedagogical areas, to educational support provided for developing countries [9]. Liaison to industry is a particular form of institutional networking, and examples can be found in the literature confirm the potential of remote labs in this context [10]. Being mostly server-based, network-distributed environments by nature, remote labs occupy a prominent role with this respect, both in relation to real labs and to simulation environments. Both simulation environments and remote labs represent a perfect match for massive open online courses (MOOC), and they will certainly benefit from the high popularity of these platforms.

Cost

(Real labs: Pro 4+, Simulation: Con 4-)

Since the users are not physically present, the space requirements for remote labs are much smaller than those required for real labs. Moreover, they can be set up in areas that would previously be restricted to storage, either for lack of appropriate lighting, or difficult access (cf. figure 2). They can actually be located outside the campus, in premises where the cost per square meter is much lower than the premium areas where the main campus premises are located. On the other hand, the decreasing cost of hardware, its miniaturization, and its increasing computational power, all concur to confer a competitive advantage to remote labs in what concerns the cost issue. However, the very same reasons place simulation environments in a similar position, with the aggravated disadvantage of a negative outlook, since the sophistication of simulation environments is known to improve at a faster pace.

Maintainability

(Real labs: Pro 4+, Simulation: Con 4-)

The absence of the users in the place where the remote lab workbenches are located greatly simplifies the maintenance requirements of these spaces. Moreover, the maintenance procedures may in many cases be carried out remotely, which contributes to reduce labor costs. However, this competitive advantage over real labs is not replicated in relation to simulation environments, which fare even better with respect to these factors. Moreover, pure simulation leaves out all non-computing elements, e.g. mechanical or chemical devices that require local maintenance. Due to increasing costs of labor, the presence of these elements in remote labs are responsible for a negative outlook in their relative positioning.

Pedagogical value

(Real labs: Con 3+, Simulation: Con 4-)

Last but not least, pedagogical value is of prime importance when it comes to remote labs or simulation environments used in educational contexts. Both alternatives offer a great potential over the traditional real lab settings, where the teaching and learning practices remained largely unchanged over the last decades. The learning outcomes are reinforced by repeating an experiment, or by trying it out beforehand, and simulation has a slight advantage over remote labs with this respect. The increasing availability of simulation engines in a wide diversity of scientific areas is responsible for the negative outlook of remote labs with respect to this criterion, which is strengthened by the fact that simulation also offers a greater variety of application domains (remote labs are hampered by the fact that all components have to be present in the construction phase).

III. RECOMMENDATIONS

Table 1 is particularly important because it helps us to delineate a plan of action for **repositioning** remote labs development and research:

1. Criteria that correspond to (Pro, Pro) gradings indicate where remote labs are particularly strong, and all research and development projects focussing in this area offer the highest probability of return on investment.
2. On the contrary, all criteria combining (Con, Con) gradings represent the weakest areas for remote labs, and investment in those areas may contribute to the survival of these technologies.
3. Finally, those criteria that combine positive gradings (Pro) in relation to real labs, but show only moderately negative gradings when compared to simulation environments (Con, but with low absolute values), represent areas where research and development is justifiable, and the decision to invest may just depend on relative institutional priorities or on particular interests of each research team.

There is only one criterion satisfying condition 1. above -- **institutional networking**. This area is considered by the authors to offer the strongest probabilities of return on investment, and should be considered as a priority for every institution that is active in this field.

Condition 2. represents an area where investment is important for the opposite reasons -- failure to improve may dictate the fall of remote labs. Again there is only criterion meeting this condition -- **pedagogical value**. Many remote labs do not bring into evidence what is the added pedagogical value that they offer in relation to real labs or simulation. This is not particularly important for real labs, which are not going to be replaced by remote labs. We can not say the same in relation to simulation, which is indeed able to replace remote labs in a growing number of scenarios. Focussing our research and development efforts on improving the pedagogical value of remote labs is therefore considered of vital importance.

Condition 3. is met by two criteria -- **availability** and **accessibility**. These are areas where successful research and development projects are able generate relevant results to convert remote labs into a mainstream educational technology.

IV. CONCLUSION

This work proposed a framework to benchmark remote labs in relation to real labs and to simulation environments, with a view to identifying how to reposition their application scenarios, and what research and development directions are able to promise higher return on investment. The instrument used for this purpose combined a selected set of criteria with a grading scale that comprises an absolute scale (to represent the current situation), and an outlook indicator (to account for the impact of emerging technologies and educational paradigms).

The conclusions derived from this work highlight the importance of using remote labs as an institutional networking tool, and bring into evidence the strategic importance of focussing our research and development effort in the improvement of the pedagogical value of these platforms. These two main directions may be seen as a repositioning proposal for the investment on remote labs, shifting away from technology into application scenarios.

Online access to workbenches offers the perfect counterpart to the MOOC-mania that started to spread in 2012. Pedagogical improvements are however still needed to fully exploit this opportunity, particularly because pedagogic aspects are commonly at the core of criticism towards MOOC platforms, but this association opens up a valuable window of opportunity that may bring remote labs to the forefront of modern educational technologies.

REFERENCES

[1] Martyn Cooper, José M. M. Ferreira, "Remote laboratories extending access to science and engineering curricular", IEEE Transactions on Learning Technologies, Volume 2, Issue 4, October 2009, pp. 342-353, ISSN 1939-1382 (available online at http://goo.gl/RKBeu; visited on Oct 31st 2013).

[2] J. Ma, J. V. Nickerson, “Hands-On, Simulated, and Remote Laboratories: A Comparative Literature Review,” ACM Computing Surveys, Vol. 38, No. 3, Article 7, September 2006.

[3] J.V. Nickerson, J.E. Corter, S.K. Esche, and C. Chassapis, “A Model for Evaluating the Effectiveness of Remote Engineering Laboratories and Simulations in Education,” Computers & Education, vol. 49, no. 3, pp. 708-725, Nov. 2007.

[4] E.D. Lindsay, S. Naidu, and M.C. Good, “A Different Kind of Difference: Theoretical Implications of Using Technology to Overcome Separation in Remote Laboratories,” Int'l J. Eng. Education, vol. 23, no. 4, pp. 772-779, 2007.

[5] R. Reilly, “Guest Editorial Virtual Laboratories: Enhancing Deep Learning in Model-Based Knowledge Domains,” IEEE Transactions on Education, Vol. 51, No. 1, February 2008.

[6] C. Gravier, J. Fayolle, B. Bayard, M. Ates and J. Lardon, “State of the Art About Remote Laboratories Paradigms – Foundations of Ongoing Mutations,” International Journal of Online Engineering, Vol. 4, No. 1 (2008).

[7] Ricardo J. Costa, Gustavo R. Alves, Mário Zenha-Rela, "Embedding instruments and modules into an IEEE1451-FPGA-based weblab infrastructure", International Journal of On-line Engineering (iJOE), Vol. 8, N. 3 (2012), ISSN 1861-2121 (available online at http://goo.gl/j1nvw9; visited on Oct 31st 2013).

[8] J. Fischer, R. Mitchell, J. del Alamo, “Inquiry-Learning with WebLab: Undergraduate Attitudes and Experiences,“ Journal of Science Education and Technology, Vol. 16, No 4, August 2007.

[9] GOLC - Global Online Laboratory Consortium (available online at http://online-lab.org; visited on Oct 31st 2013).

[10] J. M. Martins Ferreira, Ana C. Leão, "An SDRAM test education package that embeds the factory equipment into the e-learning server", International Journal of On-line Engineering (iJOE), Vol. 4 (2008), ISSN 1861-2121 (available online at http://goo.gl/ljv4hh; visited on Oct 31st 2013).

AUTHORS

José Manuel Martins Ferreira is with the Buskerud and Vestfold University College, Postboks 235, 3603 Kongsberg, Norway (e-mail: Jose.Ferreira@ hbv.no).

Olaf Hallan Graven is with the Buskerud and Vestfold University College, Postboks 235, 3603 Kongsberg, Norway (e-mail: Olaf.Hallan.Graven@ hbv.no).