Universidade do Porto
Faculdade de Engenharia
FEUP



Agostinho Luiz da Silva Castro

Intelligent Dynamic Channel Allocation For UTRA-TDD Systems

June, 2004



Universidade do Porto
Faculdade de Engenharia
FEUP

DEPARTAMENTO DE ENGENHARIA
ELECTROTÉCNICA E DE COMPUTADORES

INTELLIGENT DYNAMIC CHANNEL ALLOCATION FOR UTRA-TDD SYSTEMS

DOCTORAL DISSERTATION SUBMITTED TO:
FACULDADE DE ENGENHARIA DA UNIVERSIDADE DO PORTO

AGOSTINHO LUIZ DA SILVA CASTRO

SUPERVISOR:
PROF. JOSÉ ANTÓNIO RUELA SIMÕES FERNANDES

JUNE, 2004
PORTO – PORTUGAL

WHO´S THERE ?
(BERNARDO)[*]

[*] Hamlet, Prince of Denmark - (Act. I Scene I) by William Shakespeare

Acknowledgments

First and foremost, I wish to thank God and my family for their continuous support during all moments of my life. Additionally, I wish to thank my wife, without whose true love, support and patience this work would not have been possible.

I would like to express my gratitude to Professor José Ruela for his supervision and for all support and continuous encouragement he gave me not only in all moments of this work but also his friendly advices during the years at INESC Porto.

Moreover, I owe thanks to Brazilian Government through Coordenação de Aperfeiçoamento de Pessoal (CAPES) for the financial support along these four years. Furthermore, I owe gratitude to the Electrical and Computer Department of Federal University of Pará for allowing me full time dedication to carry out this thesis. In this context, I would like to include the INESC Porto and FEUP for providing me the total technical and scientific support that allowed me the necessary conditions for completion of my work.

Special thanks are due to Professors Vladimiro Miranda and Manuel Ricardo for their friendship, I would also like to express my sincere thanks to partners in the ARROWS project, especially the INESC Porto team: Rui Nuno Castro, Rui Alberto Castro, Jaime Dias and Gustavo Carneiro for their friendliness during my stay at INESC Porto.

Last but not least, I wish to thank my friends Rogério Almeida, Rosana Soares and family Castronuovo for the funny moments that we shared together in Portugal.

I would not finalise this acknowledgments without citing my "officemate" and friend Filipe Sousa and, of course, Ricardo Morla. Filipe because he was always willing to help me in any subject while Ricardo was my "personal" consultant for French subjects.

Although my objectives were not related to playing football in a European country, I should recognise that I scored some "remarkable" goals playing for the UTM football team in the "INESC Porto Premier League", in which I had very funny and enjoyable moments with my football player friends.

Resumo

A terceira geração dos sistemas de comunicações móveis está em fase de implantação em muitos países da Europa. Irrelevando-se certos atrasos e alguns problemas no percurso conducente a esta implantação, estudos e pesquisas têm sido realizadas considerando a proposta UMTS em seus dois modos: UTRA-FDD e UTRA-TDD.

No que se refere aos cenários propostos, a principal característica dos sistemas 3G UMTS está relacionada com a possibilidade de proporcionar várias classes de serviços tais como: conversacional (tele-conferência), *streaming*, *web browsing* (Internet) e *background* (e-mail, jogos). Contudo, a gestão destes tipos de serviços não é uma tarefa fácil pois, serviços tais como *streaming* e *web browsing* geram tráfego tipicamente na direcção do utilizador a partir da estação base (*downlink*) contribuindo assim para uma assimetria entre os recursos que são usados na transmissão a partir do utilizador para a estação base (*uplink*) e os que são usados em sentido oposto (*downlink*).

Dentre todas as componentes consideradas pelos diversos grupos de normalização dos sistemas 3G para o acesso rádio, sabe-se que o sistema UTRA-TDD é adequado para ambientes com tráfego assimétrico, tais como os citados acima. Porém, em ambientes multi-celulares, espera-se que diferentes graus de assimetria entre as células existam e alguns *timeslots* devem ser usados em sentidos opostos (*crossed timeslots*). Como resultado desta utilização, dois tipos de interferência (interferência co-canal) surgem, o que constitui um dos principais problemas destes cenários.

Estratégias para a atribuição de canais (*Dynamic Channel Allocation* - DCA) são usadas como ferramentas para a resolução dos problemas resultantes da interferência. Esta tese propõe um método eficiente para mitigar estes problemas, bem como para a atribuição dos recursos do sistema aos utilizadores finais. O método usa o conceito de antenas inteligentes (*smart antennas*), o qual estabelece que tais antenas podem ser projectadas para irradiar o seu lóbulo principal na direcção de interesse e formar nulos na direcção da interferência, combinado com uma estratégia para a atribuição de canais (DCA).

Para validar a metodologia, foi desenvolvido um algoritmo, tendo os resultados de simulações realizadas num simulador desenvolvido usando a ferramenta OPNET, demonstrado o alto grau de eficiência do método, especialmente na erradicação da interferência e na manutenção da capacidade do sistema.

Abstract

Third generation (3G) mobile communication systems are about to be deployed in many countries in Europe. In spite of the delays and other 'pathway' problems, studies have been carried out considering the UMTS proposal in both UTRA-FDD and UTRA-TDD modes. As far as the scenarios envisaged for third generation mobile communications systems are concerned, the main advantage of 3G mobile communications systems will be in the handling of a variety of classes of services such as: conversational (teleconferencing), streaming, web browsing (Internet) and background (e-mail, games). However, the management of these kinds of services is not easy since services like streaming and web browsing typically generate traffic in the downlink direction, which leads to an asymmetry between the resources that will be used in the uplink and those that will be used in the downlink direction. Among all components for radio access considered in the 3G standardisation bodies around the world, it is well known that UTRA-TDD system is suited for environment with heavy and asymmetrical traffic such as the ones cited above. However, in a multi-cell environment, it is expected that different degrees of asymmetry will exist among all cells, and some timeslots should be used in opposite directions (crossed timeslots). Thus, two types of inter-cell interference arise in such scenarios and may constitute a serious drawback; therefore a tightly control of such interference is necessary.

Dynamic Channel Allocation (DCA) strategies are a means of solving this problem. In this thesis, an efficient method for mitigating inter-cell interference and allocating system resources to mobile stations is proposed. It uses the concept of smart antennas at base stations, which establishes that they can be designed to steer a high gain to a particular direction and nulls to the undesired directions, combined with a DCA algorithm to allocate system resources to mobile users.

To validate the methodology, a DCA algorithm was developed and simulations carried out using the OPNET™ tool showed the high degree of efficiency and applicability of the method and algorithm developed, especially as far as mitigation (even eradication) of inter-cell interference and maintenance of the system capacity.

Résumé

Les systèmes de communication mobiles de troisième génération sont sur le point d'être déployés dans beaucoup de pays en Europe. Malgré les retards et autres problèmes de parcours , des études ont été effectuées considérant la proposition d'UMTS en modes d'UTRA-FDD et d'UTRA-TDD. En ce qui concerne les scénarios envisagés pour les systèmes de communications mobiles de la troisième génération, l'avantage principal des systèmes de communications mobiles de troisième génération (3G) sera de supporter des classes de services telles que: conversationnel (système de téléconférences), *streaming*, *web browsing* (Internet) et, de fond (E-mail, jeux). Cependant, la gestion de ces genres de services n'est pas facile puisque des services comme *streaming* et *web browsing* sont typiquement dans la direction du terminal mobile (*downlink*), et peuvent créer une asymétrie entre les ressources qui seront employées dans la direction de l'uplink et ceux qui seront employées dans la direction du *downlink*. Parmi tous les composants pour accès radio considérés dans les corps de standardisation 3G autour du monde, il est bien connu que le système UTRA-TDD est approprié à environnements a trafic lourd et asymétrique tels que ceux cités ci-dessus. Cependant, dans un environnement de multi-cellule, on s'attend à qu' différents degrés d'asymétrie existent parmi toutes les cellules, et à que quelques *timeslots* devraient être employés dans des directions opposées (*timeslots* croisés). Ainsi, deux types d'interférences inter cellule reliés à ces scénarios surgissent comme inconvénient principal, et un contrôle strict d'une telle interférence est nécessaire.

Les stratégies de dynamique de canal (*Dynamic Channel Allocation* - DCA) sont des moyens de résoudre ce problème. Dans cette thèse, on propose une méthode efficace pour atténuer l'interférence inter cellule et affecter des ressources de système aux terminaux mobiles. Cette méthode emploie le concept d'antennes intelligentes aux terminaux de base, ce qui établit que ces antennes peuvent être conçues pour orienter un gain élevé dans une direction particulière et null dans des directions peu désirées, combiné avec un algorithme de DCA pour affecter des ressources de système aux utilisateurs mobiles.

Pour valider la méthodologie, un algorithme DCA a été développé et des simulations effectuées à l'aide de l'outil OPNET, ce qui a montré le degré élevé d'efficacité et d'applicabilité de la méthode et de l'algorithme développés, particulièrement dans ce qui concerne la réduction (et même élimination) de l'interférence inter cellule et la préservation de la capacité du système.

Contents

List of Figures xv

List of Tables xix

Acronyms and Abbreviations xxi

List of Main Symbols xxv

1 Introduction 1

1.1 General description of the problem 1

1.2 Motivation and Objectives 2

1.3 Outline of the Thesis 3

2 Overview of Cellular Communications Systems 5

2.1 Introduction 5

2.2 The Cellular Communications System 5

2.2.1 First Generation Cellular Communications 7

2.2.1.1 Cellular Frequency Division Multiple Access (FDMA) systems 7

2.2.2 Second Generation Cellular Communications 9

2.2.2.1 Cellular Time Division Multiple Access (TDMA) systems 9

2.2.2.2 Cellular Code Division Multiple Access (CDMA) systems 9

2.2.3 Third Generation Mobile Communications 14

2.3 Smart Antennas in Mobile Communications 17

2.3.1 Spatial Filtering Capacity of Smart Antennas 18

2.3.1.1 Beamforming 18

2.3.1.2 Remarks on the use of smart antennas in mobile communications systems 27

2.4 Concluding Remarks 28

2.5 Chapter References 29

3 UMTS and UTRA-TDD Radio Interface 33

3.1 Introduction 33

3.2 UMTS services and applications 33

3.3 The Overall Architecture of UMTS 36

3.4 UTRA-TDD Radio Interface 39

3.4.1 Layer 3 or Network Layer 40

3.4.2 Layer 2 or Data link Layer 40

3.4.3 Layer 1 or Physical Layer 44

3.4.3.1 Physical Channel and Frame Structure 49

3.4.4 Remarks on UTRA-TDD. 53

3.5 Concluding Remarks 55

3.6 Chapter References 56

4 Dynamic Channel Allocation in 3G UMTS systems 59

4.1 Introduction 59

4.2 RRM Algorithms in UMTS systems 59

4.3 Interference scenario of UTRA-TDD systems 64

4.3.1 Remarks on the inter-cell interference scenario of UTRA-TDD 69
4.4 Packing of Resource Units into timeslots 71
4.5 Dynamic Channel Allocation Strategies 73
4.5.1 Related Work 73
4.5.1.1 Best Packing (Interference matrix based scheme) 74
4.5.1.2 Timeslot Scoring Algorithm 74
4.5.1.3 Least Interfered Resource (LIR) 75
4.5.1.4 Reuse Partitioning 76
4.5.1.5 TS-Opposing Technique 76
4.5.1.6 Dynamic Channel Allocation using Smart Antennas 76
4.6 Allocation Criteria 78
4.6.1 Ordered distribution 79
4.6.2 Criterion based on Time Advance (TA) 79
4.6.3 Criterion based on Path Loss measurement 80
4.7 Concluding Remarks 80
4.8 Chapter References 81
5 Dynamic Channel Allocation Methodology 87
5.1 Introduction 87
5.2 Simulation Environment 87
5.2.1 User Equipment node: Functionality 90
5.2.2 Base Station node: Functionality 91
5.2.3 RNC node: Functionality 91
5.3 Analytical model 92
5.3.1 Uplink Timeslots 92
5.3.2 Downlink Timeslots 95
5.3.3 Crossed Timeslots 96
5.4 Methodology 97
5.4.1 Scenarios definition 98
5.4.1.1 Uplink Timeslot Allocations 99
5.4.1.2 Downlink timeslot allocations 101
5.4.1.3 Crossed timeslot allocations 103
5.5 Concluding Remarks 104
5.6 Chapter References 105
6 DCA Algorithms Based on Location 107
6.1 Introduction 107
6.2 Algorithm 1 107
6.3 Algorithm 2 109
6.4 Algorithm 3 110
6.5 Simulation Results 111
6.5.1 Scenario 1 (no crossed timeslots) 112
6.5.2 Scenario 2 (crossed timeslots) 114
6.5.3 Scenario 3 – Three cells and symmetrical traffic 115
6.5.4 Scenario 4 – Three cells and asymmetrical traffic 117
6.6 Concluding Remarks 118
6.7 Chapter References 119

7 Autonomous Dynamic Channel Allocation Strategy 121
7.1 Introduction 121
7.2 An approach for solving the inter-cell interference problem by using smart antennas 122
7.3 Autonomous Dynamic Channel Allocation Strategy 124
7.4 Simulation Environment 126
7.4.1 Simulation Results 127
7.4.1.1 Scenario 1 – asymmetrical case 128
7.4.1.2 Scenario 2 – asymmetrical case in target cell 132
7.4.1.3 Scenario 3 – symmetrical case 133
7.5 Concluding Remarks 135
7.6 Chapter References 136
8 General Conclusions 137
8.1 Conclusions 137
8.2 Limitations and Future Directions 139
References in Alphabetical Order 141
APPENDIX A 149
A.1 - System Level Simulator 149
A.1.1 - Introduction 149
A.1.2 – User Equipment node 150
A1.2.1 – Attributes definition 150
A.1.2.2 – Processes description 152
A.1.3 – Base Station node 156
A.1.3.1 – Attributes definition 156
A.1.3.2 – Processes description 156
A.1.4 – RNC node 157
A.1.4.1 – Attributes definition 157
A.1.4.2 - Processes description 158
A.2 - Interaction between the different processes 162
A.2.1 – OPNET defined packets 162
A.2.1.1 – Traffic packets 162
A.2.1.2 – Transport Blocks 163
A.2.1.3 – Call Admission Control Packets 163
A.2.2 – Interface Control Information 164
A.2.3 – Communication between different processes 164
A.2.3.1 – Radio Transmission / Reception procedures 165
A.2.3.2 - Session establishment and release procedures 165
A.3 - Available Statistics 165
A.3.1 – Scalar statistics 166
A.3.1.1 - Transmission statistics: 166
A.3.2 - Vector statistics 166
A.3.3 - Animations 167
APPENDIX B 169
B.1 - Uplink timeslots 169
B.2 - Downlink timeslots (Base Station 1) 170

B.3 - Downlink timeslots (Base Station 2) 171
B.4 - Crossed timeslots 172
APPENDIX C - Pseudo-code for Algorithms 1 and 2 173

List of Figures

Figure 2.1 – The main duplexing modes employed in cellular systems. (a) FDD and, (b) TDD 7
Figure 2.2 - Cellular FDMA-FDD systems 8
Figure 2.3 - Cellular TDMA-FDD systems. 9
Figure 2.4 - Cellular CDMA-FDD systems 12
Figure 2.5 – Evolution paths of 2.5G systems 13
Figure 2.6 - Standardisation process carried out by ITU 15
Figure 2.7 - Spatial filtering of smart antennas and SDMA-based systems 17
Figure 2.8 – Geometry of an array antenna for signal modelling 18
Figure 2.9 - Block diagram that exemplifies the functioning of a beam former. 20
Figure 2.10 – Two elements array antenna with two point sources. 22
Figure 2.11 – Characterization of radiation properties of an array antenna of two elements. (a) Polar and, (b) Rectangular representations 23
Figure 2.12 – Switched beam systems. (a) Illustrative example of radiation pattern properties; (b) a block diagram of a switched beam system 26
Figure 2.13 - Block diagram of an adaptive array system 27
Figure 3.1 - UMTS QoS Architecture 35
Figure 3.2 - UMTS system architecture. 37
Figure 3.3 - Radio interface protocol architecture 39
Figure 3.4 - Mapping between logical channels and Transport Channels for UTRA-TDD (uplink). 43
Figure 3.5 - Mapping between logical channels and Transport Channels for UTRA-TDD (downlink) 43
Figure 3.6 - Data flow for non-transparent RLC and MAC. 44
Figure 3.7 - Mapping between transport channels and physical channels for UTRA-TDD 45
Figure 3.8 – Transport channel multiplexing structure for uplink and downlink 46
Figure 3.9 - Turbo encoder. 47
Figure 3.10 - Performance of 3GPP Turbo Coding. 48
Figure 3.11 – UTRA TDD radio frame format 49
Figure 3.12 - UTRA-TDD frame structure 50
Figure 3.13 - UTRA-TDD burst format. 50
Figure 3.14 - Spreading and modulation 51
Figure 3.15 - OVSF code tree 52
Figure 3.16 - Inter-cell interference in crossed slots. 55
Figure 4.1 – Inter-cell interference scenario for UTRA-TDD systems 65
Figure 4.2 - Frames for the scenario presented in Figure 4.1 67

Figure 4.3 - Interference scenario in pure timeslots. 68
Figure 4.4 - Interference scenario in the crossed timeslots 68
Figure 4.5 - Spatial filtering of smart antennas in a typical mobile communication system 77
Figure 4.6 - UTRA-TDD frames 79
Figure 5.1 Screenshot of UTRA-TDD Simulator 88
Figure 5.2 - Scenarios definition. (a) Scenario 1; (b) Scenario 2; (c) Scenario 3; (d) Scenario 4; ... 98
Figure 6.1 - Timeslot allocation for Algorithm 1 (common SP) 109
Figure 6.2 - Timeslot allocation for Algorithm 1 (crossed timeslots) 109
Figure 6.3 - Timeslot allocation for Algorithm 2 110
Figure 6.4 - Timeslot allocation for Algorithm 2 (crossed timeslots) 110
Figure 6.5 - Simulation scenario 1 113
Figure 6.6 - Transmitted power per timeslot in cell 1 113
Figure 6.7 - Transmitted power per timeslot in cell 2 113
Figure 6.8 - Simulation scenario 2 114
Figure 6.9 - Scenario 2 - transmitted power per timeslots in cell 1 114
Figure 6.10 - Scenario 2 - transmitted power per timeslots in cell 2 115
Figure 6.11 - Scenario 3 - three cells and symmetrical traffic 115
Figure 6.12 - Scenario 3 - transmitted power per timeslot in cell 1 116
Figure 6.13 - Scenario 3 - transmitted power per timeslot in cell 2 116
Figure 6.14 - Scenario 3 - transmitted power per timeslot in cell 3 116
Figure 6.15 - Scenario 4 - three cells and asymmetrical traffic 117
Figure 6.16 - Scenario 4 - transmitted power per timeslot in cell 1 118
Figure 6.17 - Scenario 4 - transmitted power per timeslot in cell 2 118
Figure 6.18 - Scenario 4 - transmitted power per timeslot in cell 3 118
Figure 7.1 - Inter-cell interference with smart antennas at base stations. (a) pure uplink timeslots, ... 122
Figure 7.2 - Inter-cell interference with smart antennas at base stations. (a) pure uplink slots, ... 123
Figure 7.3 – Allocation process in a frame. 126
Figure 7.4 - UE movements. (a) Intra-sector and (b) Inter-sector movements 128
Figure 7.5 - Scenario 1 - asymmetrical case 129
Figure 7.6 - Transmitted power per timeslots (scenario 1 - intra-sector movements); (a) position 1; (b) position 2; (c) position 3 and, (d) position 4. 130
Figure 7.7 - Transmitted power per timeslots (scenario 1 - inter-cell movements). (a) position 1; (b) position 2; (c) position 3; (d) position 4; (e) position 5 and, (f) position 6. 131
Figure 7.8 - Scenario 2 - asymmetrical case. (a) 3 UL timeslots, (b) 4 UL timeslots, (d) 5 UL timeslots and, (d) 6 UL timeslots 132
Figure 7.9 - Scenario 3 - symmetrical case 133
Figure 7.10 - Transmitted power per timeslots (scenario 3 - intra-sector case). (a) Position 1; (b) position 2; (c) position 3 and, (d) position 4 134

Figure 7.11 - Transmitted power per timeslots (scenario 3 - inter-sector case). (a) Position 1; (b) position 2; (c) position 3, (d) position 4, (e) position 5 and, (f) position 6 135

List of Tables

Table 3.1 - UMTS QoS classes 34
Table 3.2 - Logical channels for UTRA-TDD 42
Table 3.3 - Transport Channels for UTRA-TDD 42
Table 3.4 - Physical Channels (PhCH) for UTRA-TDD 45
Table 3.5 - Field length for burst types 51
Table 3.6 - Number of data symbols for burst types 1, 2 and 3 51
Table 4.1 - Inter-cell interference of UTRA-TDD systems 69
Table 6.1 - Simulation parameters 112
Table 7.1 - Inter-cell interference of UTRA-TDD systems 122
Table 7.2 - Inter-cell interference with smart antennas at base station for scenario of Figure 7.2. 124
Table 7.3 - Simulation parameters 127
Table 7.4 - Cell parameters for scenario 1 129
Table 7.5 - Inter-cell interference raises in scenario 2 133

Acronyms and Abbreviations

1G	-	First Generation Cellular Systems
2.5 G	-	2.5 Generation Cellular Communication
2G	-	Second Generation Cellular Systems
3G	-	Third Generation Cellular Systems
3GPP	-	3rd Generation Partnership Project
3GPP2	-	3rd Generation Partnership Project 2
4G	-	Forth Generation Cellular Systems
AC	-	Admission Control
ACI	-	Adjacent Channel Interference
AMPS	-	Advanced Mobile Phone System
ARIB	-	Association for Radio Industries and Business
ARQ	-	Automatic Repeat Request
BER	-	Bit Error Rate or Bit Error Ratio
BMC	-	Broadcast/Multicast Control
CAC	-	Call Admission Control
CATT	-	China Academy of Telecommunications Technology
CBR	-	Constant Bit Rate
CCI	-	Co-channel Interference
CCTrCH	-	Coded Composite Transport Channel
CDD	-	Code Division Duplexing
CDMA	-	Code Division Multiple Access
CN	-	Core Network
CP	-	Control Plane
CRC	-	Cyclic Redundancy Check
CRNC	-	Controlling RNC
CS	-	Circuit Switching
CWTS	-	China Wireless Telecommunication Standard Group
DCA	-	Dynamic Channel Allocation
DCS	-	Digital Cellular System
DL	-	Downlink timeslot
DRNC	-	Drift RNC
DS-CDMA	-	Direct-Sequence Code Division Multiple Access
DS-SS	-	Direct Sequence Spread Spectrum
EDGE	-	Enhanced Data rates for GSM Evolution
EGC	-	Equal Gain Combining
ETACS	-	Extended Total Access Communications Systems
ETSI	-	European Telecommunication Standards Institute
FCC	-	Federal Communication Commission
FDD	-	Frequency Division Duplexing
FDMA	-	Frequency Division Multiple Access
FEC	-	Frame Erasure Rate, Frame Error Rate
FH-SS	-	Frequency Hopping Spread Spectrum
FM	-	Frequency Modulation
FPLMTS	-	Future Public Land Mobile Telecommunication System
GPRS	-	General Packet Radio Service
GSM	-	Global System for Mobile communications
HC	-	Handover Control
HSDSD	-	High Speed Circuit Switched Data
ICI	-	Interface Control Information
IMT/2000	-	International Mobile Telecommunications 2000
IMT-DS	-	IMT-2000 Direct Spread

IMT-FT	-	IMT-2000 Frequency Time
IMT-MC	-	IMT-2000 Multi-Carrier
IMT-SC	-	IMT-2000 Single Carrier
IMT-TC	-	IMT-2000 Time Code
IP	-	Internet Protocol
IS	-	Interim Standard
ISDN	-	Integrated Services Digital Network
ITU	-	International Telecommunication Union
JD	-	Joint Detection
LC	-	Load Control
MAC	-	Medium Access Control
MAI	-	Multi-user Access Interference
ME	-	Mobile Equipment
MMS	-	Multimedia Messaging Service
MRC	-	Maxima Ratio Combining
MT	-	Mobile terminationTermination
MUD	-	Multi-user Detection
NADC	-	North American Digital Cellular
NMT	-	Nordic Mobile Telephone System
NTT	-	Nippon Telephone & Telegraph
OVSF	-	Orthogonal Variable Spreading Factor
PC	-	Power Control
PCCC	-	Parallel Concatenated Convolutional Code
PCS	-	Personal Communication Systems
PDC	-	Personal Digital Cellular
PDCP	-	Packet Data Convergence Protocol
PDU	-	Protocol Data Unit
PG	-	Processing Gain
PhCH	-	Physical Channel
PL	-	Path Loss
PS	-	Packet Switching
PS	-	Packet Schedule
QoS	-	Quality of Service
QPSK	-	Quadrature Phase Shift Keying
RAB	-	Radio Access Bearer Service
RLC	-	Radio Link Control
RNC	-	Radio Network Controller
RNS	-	Radio Network System
RRC	-	Radio Resource Control
RRM	-	Radio Resource Management
RT	-	Real Time
RTT	-	Radio Transmission Technologies
RU	-	Resource Unit
SAP	-	Service Access Point
SC	-	Selection Combining
SC*n*	-	Combining of the *n* Best Signals
SDD	-	Space Division Duplexing
SDMA	-	Space Division Multiple Access
SDU	-	Service Data Unit
SF	-	Spreading Factor
SIR	-	Signal-to-Interference Ratio
SMS	-	Short Messaging Service
SMS-CB	-	Short Message Service - Cell Broadcast
SP	-	Switching Point
SRNC	-	Serving RNC

SRNS	-	Serving Radio Network System
TA	-	Time Advance
TACS	-	Total Access Communication System
TB	-	Transport Block
TDD	-	Time Division Duplexing
TDMA	-	Time Division Multiple Access
TD-SCDMA	-	Time Division Synchronous CDMA
TE	-	Terminal Equipment
TF	-	Transport Format
TFCI	-	Transport Format Combination Indicator
TFS	-	Transport Format Set
TH-SS	-	Time Hopping Spread Spectrum
TIA	-	Telecommunication Industry Association
TPC	-	Transmitter Power Control
TTA	-	Telecommunications Technology Association
TTI	-	Transmission Time Interval
UE	-	User Equipment
UK	-	United Kingdom
UL	-	Uplink timeslot
UMTS	-	Universal Mobile Telecommunications Systems
UP	-	User Plane
US or USA	-	United States of America
USDC	-	US Digital Cellular
USIM	-	UMTS Subscriber Identity Module
UTRA	-	Universal Terrestrial Radio Access
UTRAN	-	UMTS Terrestrial Radio Access Network
VoIP	-	Voice over IP
WCDMA	-	Wideband CDMA
WWW	-	World Wide Web

List of Main Symbols

W_{inf}	-	Bandwidth of the unspread signal
W_{SS}	-	Bandwidth of the spread signal
$\vec{v}(\theta_\ell,\phi_\ell)$	-	Unit vector in direction (θ_ℓ,ϕ_ℓ) of the $\ell-th$ point source
υ	-	Speed of propagation of plane wave
$\vec{r}_m$	-	Position vector of m-th element of array
ℓ	-	Number of point sources
$\eta_m(t)$	-	Background noise
ω_m^*	-	Complex conjugate weight of the beam former
$\mathrm{a}(\theta_\ell,\phi_\ell)$	-	Steering vector or array response vector
$f(\theta,\phi)$	-	Array factor
$F(\theta,\phi)$	-	Radiation pattern of array
$g_a(\theta,\phi)$	-	Radiation pattern of element of array
R	-	Correlation matrix
λ	-	Wavelength of plane wave impinging on array
$\tau_m(\theta_\ell,\phi_\ell)$	-	Time taken by a plane wave arriving from $\ell-th$ point source in direction (θ_ℓ,ϕ_ℓ) and measured from the m-th element to the reference point
D	-	Reuse distance
d	-	Element spacing of array
k	-	Cluster size
m	-	Number of element of array
m_ℓ	-	Complex modulation function or complex envelope
$P(W)$	-	Mean output power of array
PG	-	Processing Gain
q	-	Reuse factor
R	-	Cell radius
R_b	-	Bit rate
R_c	-	Chip rate
SF	-	Spreading Factor
$u(t)$	-	Induced signal by point source ℓ on the reference element of array
$x_m(t)$	-	Complex envelope of total signal induced on the m-th element of array
$y(t)$	-	Output of the array
P_r	-	Received power by the base station or user equipment
β	-	Interference reduction factor
α	-	Orthogonality factor
I_{OWN}	-	Intra-cell interference
I_{OTHER}	-	Inter-cell interference
N_0	-	Background noise
$I_{UE\to i}$	-	Inter-cell interference from user equipment that reach the receiver $\boldsymbol{i}$ in the tarcel cell
$I_{BS\to i}$	-	Inter-cell interference from base station that reach the receiver $\boldsymbol{i}$ in the tarcel cell
$PL_{UE\to Rx}$	-	Propagation losses between UE and the receiver in the target cell
$PL_{BS\to Rx}$	-	Propagation losses between BS and the receiver in the target cell
N_{UL}	-	Number of uplink timeslots in a frame
N_{DL}	-	Number of downlink timeslots in a frame
N_{FREE}	-	Number of free timeslots in a frame
R_{UL}	-	Total bit rate for uplink
R_{UL}	-	Total bit rate for downlink
P_i	-	Power received at the base station

I	-	Total inter-cell interference
N	-	Thermal noise power at the base station
P_{ij}	-	Received power at BS_j due to UE_{ij} (uplink timeslots)
P_{ij}^*	-	Power transmitted by UE_{ij} (uplink timeslots)
$I_{ij,k}$	-	Inter-cell interference caused by UE_{ij} in BS_k
$I_{j,k}$	-	Inter-cell interference caused by cell i in BS_k
I_k	-	Total inter-cell interference caused by the other cells in BS_k (I_{OTHER})
$(P_{ij})_0$	-	Value of P_{ij} assuming $I_j=0$
$(I_{ij,k})_0$	-	Component of $I_{ij,k}$ due to $(P_{ij})_0$
$\alpha_{ij,j}$	-	Attenuation between each UE_{ij} and BS_j (own cell)
$\alpha_{ij,k}$	-	Attenuation between each UE_{ij} and BS_k (other cells)
P_{ij}^*	-	Power transmitted by BS_j to UE_{ij} (station I in cell j) (downlink timeslots)
P_j^*	-	Total power transmitted by BS_j
P_{ij}	-	Received power at UE_{ij} (downlink timeslots)
$I_{ij,kl}$	-	Interference caused to UE_{kl} due to P_{ij}^*
$I_{j,kl}$	-	Interference caused to UE_{kl} due to BS_j
I_{jkl}	-	Total interference caused to UE_{kl} due the others cells
$(I_{ij,kl})_0$	-	Component of $I_{ij,kl}$ due to $(P_{ij})_0$
x_{ij}	-	Sector identifier
DTP_{ij}	-	Difference in traffic patterns

1 Introduction

1.1 General description of the problem

The *great jump* promised by third generation (3G) mobile communications systems is the capability of handling a variety of mixed services not supported in 2G systems, such as: conversational (teleconferencing, video-telephony), streaming (audio and video), interactive (web browsing, games) and background (e-mail). Some services, like streaming and web browsing, generate highly asymmetrical traffic, typically in the downlink direction. This has an impact in the management of radio resources and may lead to inefficiencies when such resources are equally divided between uplink (UL) and downlink (DL).

Among all radio access systems considered by the standardisation bodies for 3G mobile communications, it is known that, in the framework of 3rd Generation Partnership Project (3GPP), the Universal Terrestrial Radio Access – Time Division Duplexing (UTRA-TDD) system is well suited for environments with heavy and asymmetrical traffic, such as those mentioned above.

UTRA-TDD systems are implemented on an unpaired band, using a combined time and code division multiple access scheme; the basic resource unit is the triple (one code, one timeslot, one frequency). According to 3GPP, transmission is organised in frames with 10 ms duration and a frame is divided into 15 independent timeslots. Any timeslot within a frame can be assigned for uplink (UL) or for downlink (DL) transmission.

It is thus possible to exploit asymmetries between UL and DL traffic, which result in a different number of timeslots allocated to each direction. The frontier between an UL and a DL timeslot is called switching point (SP); a frame may contain a single or multiple switching points. Figure 1.1 shows the example of an UTRA-TDD frame with a single switching point.

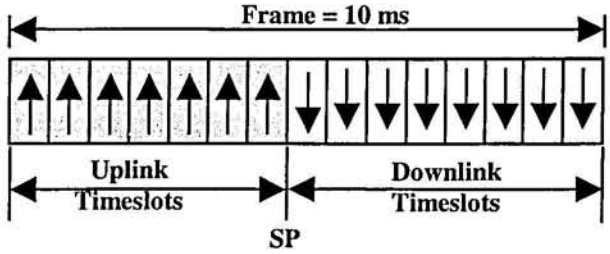

Figure 1.1 - UTRA-TDD frame structure.

When we consider multiple cells in a coverage area and since radio resources are scarce, timeslots must be reused in neighbouring cells. At a first glance, it appears that any given timeslot should be used in the same direction (UL or DL) in adjacent cells. This seems natural and is probably the

better choice either for symmetrical traffic or for asymmetrical traffic with a similar partition between UL and DL in adjacent cells.

Since traffic patterns are likely to be different and variable, imposing a common partition between UL and DL timeslots in adjacent cells could be highly inefficient. To improve resource utilisation, the feasibility and benefits of allocating timeslots in opposite directions (crossed timeslots) in different cells must be assessed.

One of the main drawbacks of such a solution is the existence of new inter-cell interference sources. Besides user equipment to base station and base station to user equipment interference, two other critical sources of inter-cell interference arise, that is, user equipment to user equipment and base station to base station interference.

This corresponds to the worst interference condition. In this case, the performance of DCA strategies can be reduced and additional complexity is introduced into the Radio Resource Management (RRM) algorithms (for example, Power Control, Admission Control and Congestion Control algorithms). These problems occur since interference values in crossed timeslots may be much higher and their influence more difficult to manage than in pure UL or DL timeslots. Thus, the allocation of crossed timeslots requires a tight coordination among cells in order to avoid the most critical interference conditions. Therefore, the final objective of this thesis deals with such a problem.

1.2 Motivation and Objectives

As compared to UTRA-FDD systems, a small number of projects and research work have addressed the issues related to UTRA-TDD systems and, in particular, dynamic channel allocation strategies. In most of them, the interference problem in crossed timeslots is not addressed directly; instead, they try to design a DCA strategy that solves the interference problem indirectly. In other words, they make their algorithms work hard in finding the best combination (in terms of some cost function) for allocating the users into the system. In fact, those algorithms are designed to manage interference or, in other words, to find out a specific combination that tries to reduce as much as possible its influence in the channel allocation process.

However, in an ideal scenario with no interference or with the interference mitigated, the channel allocation procedure could be based only on available system resources, since the interference would not be the main concern any longer.

In this thesis, we address this interference problem directly and solve it by using the concept of smart antennas. A new Dynamic Channel Allocation methodology that minimizes such interference in crossed timeslots is presented and justified. It is worth mentioning that the initial activities of

this work were carried out in the framework of the ARROWS project of the IST programme, during which some initial results were obtained.

The Dynamic Channel Allocation (DCA) methodology presented in this work uses the concept of spatial filtering property of smart antennas at base stations, which means that these antennas can be designed to steer a high gain to a particular direction and nulls to the undesired directions, combined with a Dynamic Channel Allocation (DCA) algorithm to allocate system resources to mobile users.

Concomitantly, this thesis aims at providing an advanced Dynamic Channel Allocation methodology and Quality of Service (QoS) management solutions for the support of integrated voice and data services within the context of Universal Terrestrial Radio Access (UTRA), namely UTRA-TDD systems. Therefore, the main objectives are: to develop, simulate, evaluate and validate advanced DCA algorithms and procedures for an optimal and efficient use of the radio resources provided by UTRA to enable high capacity for multiservice applications requiring high bit rate (up to 2Mbit/s).

To demonstrate the benefits of the developed DCA algorithms, simulations were carried out using the OPNET™ tool for which an UTRA-TDD simulator was developed.

1.3 Outline of the Thesis

The concerns and objectives previously mentioned lead to this text that is organised in 8 chapters and 3 appendices. The remaining chapters terminate with a list of references used throughout the corresponding text.

In chapter 2 we make a general description of the cellular communication systems where we cover some useful concepts and features of cellular systems used throughout this thesis, as well as we analyse the use of the spatial filtering property of smart antennas for reducing the inter-cell interference in mobile communications systems.

In chapter 3, we characterize the 3G system used in this thesis, that is, the Universal Mobile Telecommunication System (UMTS). Emphasis is given to the main aspects of UTRA-TDD systems, mainly those related to the air interface.

In chapter 4, we present a detailed analysis of the interference problem that arises in crossed timeslots of UTRA-TDD systems, and we describe related work in the field of DCA strategies.

In chapter 5, we describe the overall methodology adopted in this thesis. A brief analysis of the simulation environment is performed. An analytical model, which describes the behaviour of three types of timeslots (uplink, downlink and crossed), is derived. Afterwards, some reference scenarios are simulated in order to derive some initial and basic rules used in the definition of DCA algorithms.

In chapter 6, a detailed description of the DCA algorithm simulated with the simulator developed in the OPNET™ tool is given. Three DCA algorithms are developed, which mitigate the inter-cell interference problem when traffic in neighbouring cells exhibit the same and/or different asymmetry patterns. Results are also shown and analysed in the chapter.

Chapter 7 presents the DCA method proposed in this thesis. The spatial filtering concept of smart antennas is described as well as how it is used in the proposed method. Chapter 7 also presents how this was translated into a DCA algorithm. The simulation results are presented and discussed, as well.

Chapter 8 presents the relevant conclusions and the main contributions of this thesis and future works are indicated for continuing of this research.

This thesis ends with three appendices. Appendix A presents a detailed explanation of the structure of the simulator developed in the OPNET™ tool, Appendix B shows some numerical values of the transmitted powers and interference of users' equipment and base station which helped in the analysis carried out in chapter 5 and Appendix C presents the pseudo-code of the algorithms used in chapter 6.

2
Overview of Cellular Communications Systems

2.1 Introduction

Modern mobile communications systems are based on the cellular concept. The idea behind this concept is simple and appeared in the late 1960s when Bell System proposed a new concept to alleviate the problem of spectrum congestion by restructuring the coverage areas of mobile radio systems. However, even though this revolutionary concept has represented advances and provided the development of several cellular systems, some topics inherent in cellular system environments still remain challenging for operators, industry and the scientific community. Most of them are related with the need to increase system capacity, which is mainly limited by the multipath effects on mobile channels and by various types of interference present on typical cellular environments. This thesis proposes a method to mitigate some types of interference so as to guarantee that the system capacity is maintained. Therefore, this chapter is intended to cover some useful concepts and features of cellular systems used throughout this work, as well as to analyse the use of smart or adaptive antennas for reducing interference.

2.2 The Cellular Communications System

The main differences between the concept proposed by Bell System and the approach adopted by old mobile communications systems are [1]:

- the large number of low-power transmitters designed to serve only small areas (called cells), instead of the high-power transmitters of ancient cellular communication systems, which were located on top of the highest points to cover a large area;
- the use of the frequency reuse concept in which the same set of channels can be reused in different geographical locations sufficiently apart from each other so that co-channel interference can be minimized and,
- the introduction of the handover switching technique that allows a call to proceed uninterrupted when the user moves from one cell to another in order to maintain a seamless service.

Other issues that characterize and distinguish the cellular systems are related to the way multiple users access/share the transmission medium (or radio channel) and, how the duplexing scheme is implemented.

The problem of multiple access consists in dividing the available and finite radio resource in such a way that fractions of this resource can be assigned to a number of independent users without creating significant mutual interference. Multiple access techniques, which are defined in the frequency, time, code and spatial domains, deal with this issue and allow many mobile users to share simultaneously a finite amount of radio spectrum. In cellular communications, these techniques mainly correspond to Frequency Division Multiple Access (FDMA), Time Division Multiple Access (TDMA), Code Division Multiple Access (CDMA) and Space Division Multiple Access (SDMA) .

The term duplexing, in the existing cellular systems, may be interpreted as full duplex communication where users can transmit and receive at the same time. Analogous to access methods, the duplexing modes can be defined in frequency, time, and code domains. Therefore, they correspond to Frequency Division Duplexing (FDD), Time Division Duplexing (TDD) and Code Division Duplexing (CDD) modes, respectively. However, although some literature has claimed for a special attention to CDD [2] and other has defined a Spatial Division Duplexing (SDD) in the spatial domain [3], the majority of cellular systems have adopted either FDD or TDD duplexing modes.

In Frequency Division Duplexing (FDD) mode, two different frequencies (bandwidths) sufficient apart from each other are used for providing simultaneous transmission/reception. In such a duplex mode, special care has to be given to the design of transmitters and receivers in order to separate transmitter's signals from receiver's signals. In cellular communication systems, separate transmit and receive antennas are used at base stations while a single antenna with a duplexer[1] is used at the user equipment. Instead of the frequency domain, Time Division Duplexing (TDD) uses the time domain to provide bidirectional and separate flows of information. In a single frequency (bandwidth), a given period of time is divided in portions called timeslots, which are allocated for transmission in one direction at a time. Figure 2.1 exemplifies both FDD and TDD duplex modes commonly used in cellular systems.

A combination of FDD or TDD mode with a multiple access technique characterizes the existing cellular systems as well as the ones that are about to be deployed. However, it is worth mentioning that, even though all combinations may be feasible, they were not developed and deployed at the same time. The first cellular communication systems, for example, were designed using FDMA access techniques with a FDD duplexing mode, whereas TDMA and CDMA techniques using the FDD mode characterize the second generation of cellular communications. Thus, in order to provide a useful description of such access methods, they will be described along with the description of the various generations of cellular communications systems.

[1] A switching device that provides alternating transmission and reception through the same transmission system.

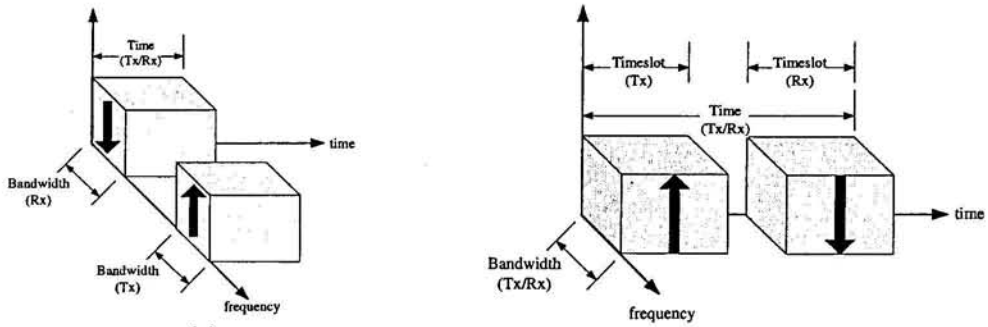

Figure 2.1 – The main duplexing modes employed in cellular systems. (a) FDD and, (b) TDD

2.2.1 First Generation Cellular Communications

First cellular communication systems are also called 1G systems. These systems were deployed around 1980s, employed analogue FM with channel spacing around 25-30 kHz and were designed based on Frequency Division Multiple Access (FDMA) techniques using the FDD duplexing mode. The traffic managed by such systems was only related to voice service.

2.2.1.1 Cellular Frequency Division Multiple Access (FDMA) systems

As mentioned before, the Frequency Division Multiple Access (FDMA) technique uses the frequency domain to allow several users to share the transmission medium. This is carried out by dividing the available bandwidth into a number of equal sub-bands (channels) and assigning an individual user to a unique channel. As a consequence, no other user can share the same channel during a call period. In fact, a channel consists of a pair of frequencies; one is used for transmission from the base station to a mobile user (downlink direction or forward transmission) and the other is utilized for uplink or reverse transmission, that is, from mobile user to base station. In 1G systems, the FDMA access technique is used together with the FDD duplexing mode to provide simultaneous transmission and reception in the frequency domain. Figure 2.2 shows the modus operandi of typical cellular FDMA-FDD systems.

As far as interference is concerned, two main types of interference can be highlighted in cellular FDMA-FDD systems. The first one is referred to as adjacent channel interference (ACI) and is due to receiver and transmitter imperfections that cause some power leakage from a channel into an adjacent one. A guard band is commonly utilized to reduce such interference. The second one is called co-channel interference (CCI) and is characterized by undesired signals from others cells. These signals are from base station and/or user equipment transmitting in the same frequency.

To manage this type of interference, first generation systems were designed based on the frequency reuse concept, in which the same set of channels can be reused in different geographical locations sufficiently apart from each other.

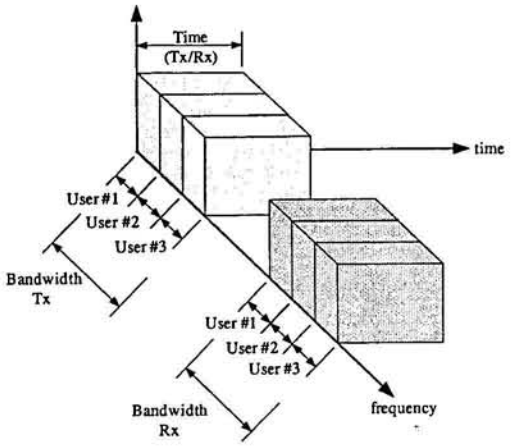

Figure 2.2 - Cellular FDMA-FDD systems

The minimum distance between co-channels is given by the relationship [4]:

$$D = q \cdot R \tag{2.1}$$

where R is the cell radius, q is defined as CCI reduction factor [5] or reuse factor that, for hexagonal-shaped cells, is expressed by $q = \sqrt{3 \cdot K}$. In the reuse factor expression, K represents the cluster size, that is, the number of cells that use a set of different channels.

Although all 1G cellular communications systems were designed based on FDMA-FDD, they also had some differences, which were responsible for the emergence of various standards around the world. The world's first cellular system was deployed by Nippon Telephone and Telegraph (NTT) in 1979, in Tokyo, Japan. Following the Japanese deployment, the Nordic Mobile Telephone (NMT 450) system, developed by Ericsson, began its operation in Scandinavia, in 1981. Total Access Communications System (TACS) was introduced in the United Kingdom in 1982 and the Extended Total Access Cellular System (ETACS) was deployed in 1985. In the same decade, the C-450 cellular system was introduced in Germany and Portugal and the Radicom 2000 began operating in France. Unlike Europe, where there were many different systems, in the United States the situation was quite different. In the US, there was initially only a single analogue cellular standard called Advanced Mobile Phone System (AMPS), which started its operation in 1983, in Chicago.

As can be noted in the above scenario, there were many 1G systems standards deployed in the world around 1985. Therefore, and especially in Europe, different systems were incompatible, both in equipments and in operation. This represented a drawback since not only was the mobile equipment limited to operation within national boundaries but also there was a very limited market for each type of equipment, so economies of scale, and the subsequent savings, could not be realized [6]. As far as 1G systems' problems and technical limitations are concerned,

manufacturers began to look for new technologies that could overcome the problem and improve the performance of cellular systems.

2.2.2 Second Generation Cellular Communications

In addition to voice service, second generation (2G) cellular communications systems are capable of providing data services at low bit rate. Second generation systems were designed based on digital modulation formats and use TDMA and CDMA multiple access techniques in FDD mode, mainly [7].

2.2.2.1 Cellular Time Division Multiple Access (TDMA) systems

The Time Division Multiple Access (TDMA) technique uses the time domain to provide access of several users to the transmission medium. In this technique, the entire bandwidth is made available to all users but on a time-sharing basis. The isolation of user's signals is achieved by dividing the time scale into timeslots, which are periodically allocated to each user for the duration of a call. Additionally, a guard time is necessary in order to allow synchronisation of receivers between different timeslots and frames [7]. A timeslot is mainly made up of a preamble, an information message field, and tail bits. Timeslots are organised in frames that define the period of users access to the medium and, as a consequence, the transmission of any user is carried out in a discontinuous manner. TDMA can be utilized with both FDD and TDD duplexing modes. In TDMA-TDD, half of the timeslots in the frame would be used for downlink transmission and the other half for uplink. On the other hand, two bands of frequencies are required in TDMA-FDD systems, one for timeslots set up for downlink transmission and the other one for uplink timeslots. The main Cellular TDMA systems use FDD duplexing mode, whose principle of operation is shown in Figure 2.3.

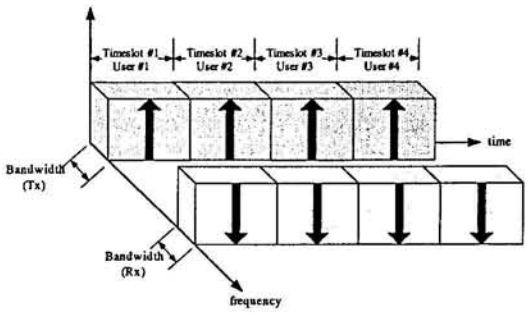

Figure 2.3 - Cellular TDMA-FDD systems.

2.2.2.2 Cellular Code Division Multiple Access (CDMA) systems

CDMA is a multiple access scheme based on spread spectrum communications techniques. In spread spectrum techniques a signal (users' signal) is spread over a bandwidth by a spreading

signal (code sequence) that has a chip rate which is orders of magnitude greater than the date rate of the user's signal [7].

The primary advantage of spread spectrum techniques is their ability to reduce interference, either unintentional interference by other users that simultaneously attempt to transmit through the channel or intentional interference by a hostile transmitter attempting to jam the channel. The main parameter of spread spectrum-based systems, responsible for this advantage, is the so-called processing gain (PG) or spreading factor (SF). The SF is expressed by the ratio between the bandwidth W_{ss} of the spread signal (or chip rate R_c) and the bandwidth W_{inf} of the unspread signal (or symbol rate R_b), that is [8]:

$$PG = SF = \frac{W_{ss}}{W_{\inf}} = \frac{R_c}{R_b} \tag{2.2}$$

The spreading factor is commonly expressed in dB and really provides a clear notion of the robustness of systems against interference from multi-user access. For example, a spread spectrum-based system with SF = 30 dB provides 30 dB of antijam capability; that is, a jammer would have to generate 30 dB more power to have the same jamming effect on this system, compared, for example, with the conventional BPSK system (no SS) [9].

Spread Spectrum techniques were originally developed for military applications, where resistance to jamming (interference) is of major concern [10]. However, commercial applications have become possible and culminated with the utilization of such techniques in cellular communications systems, namely building a base of cellular CDMA communications systems [11]. There are different spread spectrum techniques such as: Direct Sequence Spread Spectrum (DS-SS), Frequency Hopping Spread Spectrum (FH-SS), Time Hopping Spread Spectrum (TH-SS) [7] [8] [9] and some combinations of them referred to as Hybrid Spread Spectrum Techniques [12]. However, in cellular communication systems, the CDMA is based on DS-SS and so is also called Direct Sequence-CDMA (DS-CDMA). As we shall see further, this thesis has been based on DS-CDMA and, in order to provide a description of some concepts that are utilized throughout this work, some features of DS-CDMA (hereafter referred to as CDMA) are introduced in the following.

Unlike FDMA and TDMA techniques, code division multiple access permits multiple access on the same frequency (bandwidth) and at the same time. Users are discriminated by means of pseudorandom code sequences or signature sequences that correspond to the physical channel. Each transmitter/receiver pair is allocated one code sequence with which communication is established. At the reception side, coherent detection (despreading) is carried out by means of a correlation operation. In this operation, only a desired user's signal is detected by using its own

code, so that the other users' signals appear as noise to the receiver. Zero-cross correlation codes or orthogonal codes are required in order to avoid unwanted signals due to multiple access [3].

However, in practical cellular communications systems orthogonality is extremely difficult to achieve. In a single cell environment, for example, the received signal will be corrupted by noise, interfered by both multipath fading and by other users generating multi-user interference (MAI). Furthermore, this signal is delayed by a time-dispersive medium [13].

Diversity combining methods such as Selection Combining – SC, Maximal Ratio Combining – MRC, Equal Gain Combining – EGC and Combining of the n best signals – SCn, as well as Rake receivers exploit the multipath nature of communication channels to improve the link performance [7].

Multiple access interference (MAI), which limits the capacity and performance of CDMA systems, refers to the interference between CDMA users that are in the same cell and access the channel at the same time. This interference is the result of the random time offsets between signals, which make the orthogonality of code sequences very difficult [14]. Nevertheless, in downlink transmission, the base station is capable of synchronising the transmission of all users' signals and a good orthogonality of code sequences can be achieved by using the Walsh-Hadamard codes. As a result, interference can be mitigated. In the uplink, this scenario is quite different since there is no coordination in the transmission of the users' signals [13]. Multi-user detectors (also referred to as joint detectors or interference cancellers) use the information about all users to better detect each individual user [14]. The utilization of multi-user detection algorithms have been extensively studied and it has been proved that, in theory, multi-user access interference can be mitigated by using such detectors [14][15][16].

Additionally, in a multi-cell environment, signals from other cells can also cause interference into a given cell of interest. Analogous to MAI, this interference from other cells limits the performance and capacity of CDMA-based systems. Efficient use of system requires allocating as many users as possible into the system. Increasing the number of CDMA users, both MAI and other types of interference increase. As previously discussed, it is possible to mitigate the interference due to multipath fading and to the multi-user access. However, solving other cell interference problems is still a challenge. This thesis addresses problems in this category and proposes a method for mitigating such types of interference in order to improve the performance and the capacity of the system.

Before concluding this discussion about CDMA operation, it is worth mentioning another problem of CDMA-based systems referred to as near-far problem. This problem is present when an interfering transmitter is much closer to the receiver than the intended transmitter. As a consequence, signal from the nearest interfering transmitter will be received with more power than

the signal from the intended user. Thus, more interference will be generated. In order to guarantee that all users are received with equal power, a power control mechanism needs to be implemented. The use of power control is a crucial part of CDMA-based systems and ensures that signals from all users are received approximately with the same power at the receiver.

Regarding the duplexing modes, associations with FDD and TDD are both possible. However, the FDD mode is the most common in 2G cellular systems. Figure 2.4 shows the operation of a typical CDMA-FDD system used in 2G cellular systems.

Although both TDMA and CDMA access methods are used in 2G cellular communications systems, most of cellular subscribers in late 2001 were users of TDMA-based systems [7]. This was mainly due to the way the development of cellular communications systems was carried out around the world.

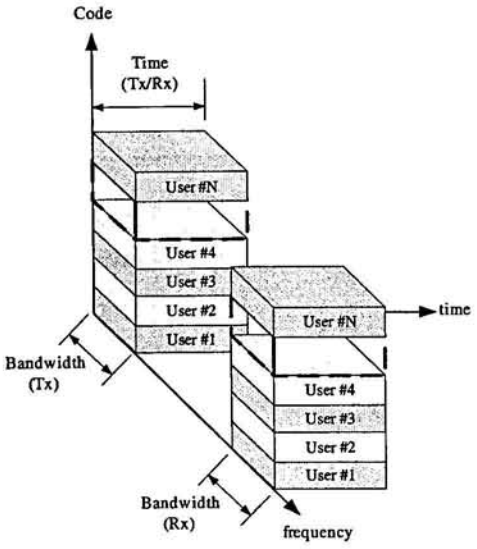

Figure 2.4 - Cellular CDMA-FDD systems

As far as the development of 2G cellular communications systems is concerned, Europe led the way with the development of Global System for Mobile communications (GSM), the Pan-European digital cellular standard. The GSM system was developed with a purpose of meeting certain criteria such as: good subjective speech quality, low terminal and service cost, support for international roaming, ability to support handheld terminals, support for a range of new services and facilities, spectral efficiency, and Integrated Services Digital Network (ISDN) compatibility. GSM uses the TDMA multiple access technique and operates in a new frequency band, over 890-960 MHz.

In the US, AMPS was the only 1G standard. Since there was just one standard, there was no need to set aside new spectrum bands. However, the AMPS standard was becoming outdated. Nevertheless, it was the US turn to promote a multitude of systems. Instead of creating a single standard, the American industry's response was to introduce new, but incompatible bandwidth

efficient standards [17]. To allow a gradual transition from AMPS to the newer digital systems, dual-mode systems are specified in US, which can be divided in two main standards: Interim Standard 54 (IS-54), also known as North American Digital Cellular (NADC) or US Digital Cellular (USDC) and the Interim Standard 95 (IS-95) also known as cdmaOne. The former is based on the TDMA multiple access technique and it was updated by a new version IS-136 whereas; the latter, is based on the CDMA access technique.

It is worth mentioning that during the deployment period of 2G systems in US, the Federal Communication Commission (FCC) auctioned a new block of spectrum around 1.9 GHz and coined the systems allocated in this band as Personal Communication Systems (PCS). The idea was for PCS to offer a slightly different range of coverage and service than cellular systems around 900 MHz, although, in practice, PCS systems are almost identical to cellular ones, only at a higher frequency [17].

The 2G standards previously cited were the base for other 2G systems such as the British Digital Cellular System 1900 (DCS-1900) that uses the PCS band and Personal Digital Cellular (PDC), which was allocated in a band around 900 MHz, in Japan.

Second generation cellular communications systems started to be deployed in the beginning of 1990s. At the same time, the new form of information dissemination, that is, the Internet, began to be used around the world. In its original form, all 2G cellular systems were not able to support the required date rates of Internet applications and, as a consequence, new data-centric standards have been developed for retrofitting the 2G standards with the capability of managing such data rates. These new standards are represented by 2.5G systems and allow existing 2G systems to be upgraded for supporting web browsing, e-mail and location-based mobile services. Examples of 2.5G systems are High Speed Circuit Switched Data (HSDSD), General Packet Radio Service (GPRS), Enhanced Data rates for GSM Evolution (EDGE) and IS-95B. Figure 2.5 shows the evolution paths from 2G to 2.5G systems.

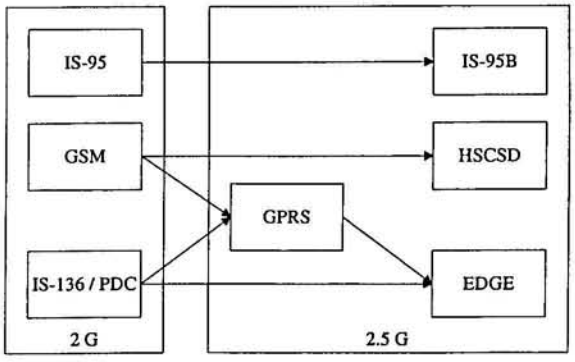

Figure 2.5 – Evolution paths of 2.5G systems

According to the description carried out so far, it is relatively easy to note that the cellular systems were gradually created to meet the new society needs. First generation cellular systems were

created for managing the main service at that time, i.e., voice. Afterwards, 2G systems were developed to cope with new low data rate services and updated by 2.5G systems for higher data rates. However, as pointed out before, 2G systems began operating almost at the same time as widespread use of Internet took place. Although a great effort has been made to cope with the new Internet applications, 2G systems and their updates were not designed to handle such kinds of applications as videoconferencing, streaming video and web browsing.

2.2.3 Third Generation Mobile Communications

In addition to the capacity of handling various types of applications such as videoconferencing, streaming video and web browsing, third generation (3G) mobile communications was born with a visionary idea of a global system to connect anybody, anywhere and at anytime. The framework for carrying out this idea has been led by the International Telecommunication Union (ITU), which formulated a plan to implement a global frequency band around 2 GHz that would support a single, ubiquitous wireless communication standard for all countries in the world. This plan was called International Mobile Telecommunications 2000[2] (IMT-2000) and has been successful in helping to cultivate active debate and technical analysis for new high-speed mobile telephone solutions when compared to 2G systems.

Successful development of specifications of IMT-2000 would not have been achieved without the extensive and substantial harmonization activities performed by the ITU with its ability to promote a global consensus. This can be noted in the early stages of the standardisation process when ITU was faced with a dilemma: should the new generation be designed based on the creation of a single global standard or should it be an evolution of the networks and systems according to the requirements defined in 3G's vision? Although both points of view could enable economy in large scale for system components, the hope for a single worldwide standard has not materialized. The second alternative had bigger strength, since it also protects some investments already carried out by the operators and manufacturers.

In that way, ITU – Radiocommunication Standardisation Sector (ITU-R) began its work by formulating a set of items, such as the Radio Transmission Technologies (RTT) that 3G systems could be based on. RTT candidate proposals were submitted to ITU by several regional standard organisations such as the Association for Radio Industries and Business (ARIB) in Japan, the Telecommunications Technology Association (TTA) in Korea, the European Telecommunication Standards Institute (ETSI) in Europe, the China Academy of Telecommunications Technology (CATT) and both the Telecommunication Industry Association (TIA) and the Technical Subcommittee T1P1 in the USA.

[2] It was previously coined as Future Public Land Mobile Telecommunication System (FPLMTS).

Many RTT satellite-based and terrestrial proposals were submitted to ITU, which resulted in a somewhat chaotic situation in the selection process for a unique RTT for IMT-2000. However, as far as terrestrial proposals are concerned, the RTT technologies were not quite different and some of them had similarities. Therefore, ITU introduced the concept of family and harmonized all proposals by merging them into five family members:

- IMT/2000 FDMA/TDMA Multi-carrier or IMT-2000 TDMA Multi-Carrier;
- IMT/2000 TDMA Single carrier;
- IMT/2000 CDMA TDD;
- IMT/2000 CDMA Multi-carrier;
- IMT/2000 CDMA Direct Spread.

As can be seen, the grouping of RTTs allowed defining two distinct paths to 3G systems. One considers 3G systems based on the TDMA access technique and the second considers that 3G systems should be based on the CDMA access technique. Figure 2.6 shows the result of the standardisation process according to the access techniques used to classify the families [18].

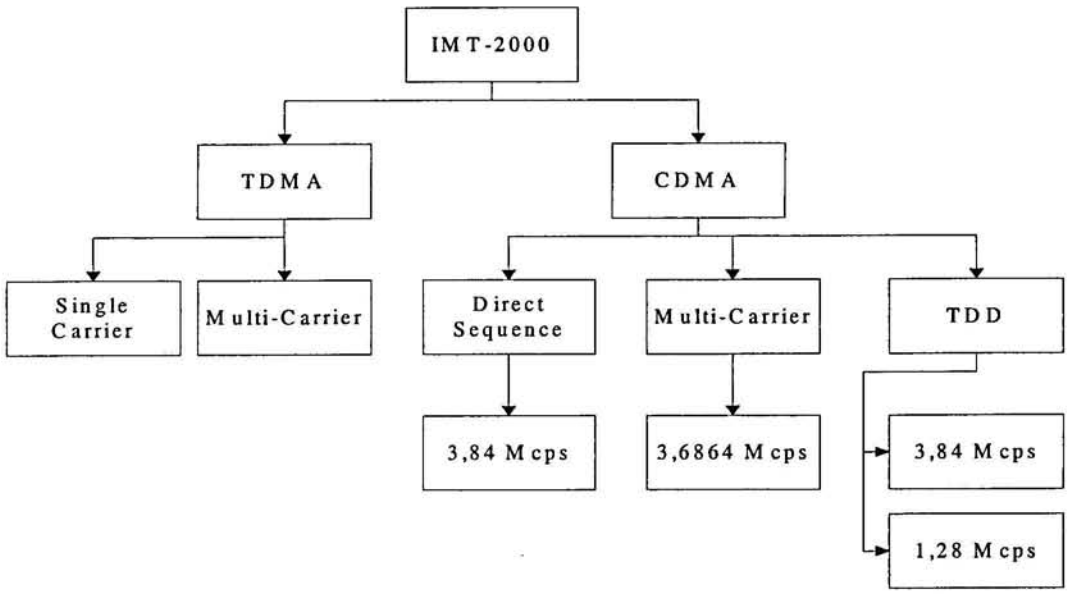

Figure 2.6 - Standardisation process carried out by ITU

CDMA-based families are considered the most important 3G technologies [7] and have backward compatibility with the majors 2G systems. IMT/2000 CDMA Multi-carrier, for example, was based on TIA's RTT proposal called cdma2000. The latter has backward compatibility with IS-95B, which is the cdmaOne upgrade. IMT/2000 CDMA Direct Spread and IMT/2000 CDMA TDD, also known as CDMA Direct Sequence or Wideband CDMA (WCDMA), were based on the European proposal called Universal Terrestrial Radio Access (UTRA[3]) in both FDD and TDD modes, respectively. Moreover, the harmonization process for IMT/2000 CDMA TDD resulted in the

[3] It was formerly called Universal Mobile Telecommunications Systems (UMTS) Terrestrial Radio Access.

inclusion of 1.28 Mcps TDD based on the TD-SCDMA proposal from China Wireless Telecommunication Standard Group (CWTS) [19]. WCDMA has backward compatibility with 2G systems GSM, IS-136 and PDC, as well as 2.5 GPRS and EDGE systems.

Regarding the proposals using CDMA, it is important to refer that, at the time of evaluating the RTT proposals, ITU had a valuable cooperation of two technical forums: 3rd Generation Partnership Project (3GPP) and 3rd Generation Partnership Project 2 (3GPP2). These forums were born from initiatives of standardisation organizations, which agreed that harmonization activities would lead to a quasi world standard. 3GPP are linked mainly to CDMA Direct Sequence in both FDD and TDD modes, whereas 3GPP2 are linked to cdma2000 [19]. The original scope of 3GPP was to produce globally applicable Technical Specifications and Technical Reports for a 3rd Generation Mobile System based on evolved GSM core networks and the radio access technologies that they support (i.e., Universal Terrestrial Radio Access (UTRA), both in Frequency Division Duplex (FDD) and Time Division Duplex (TDD) modes). The scope was subsequently amended to include the maintenance and development of the Global System for Mobile communication (GSM) Technical Specifications and Technical Reports including evolved radio access technologies (e.g. General Packet Radio Service (GPRS) and Enhanced Data rates for GSM Evolution (EDGE))[20]. Although third generation mobile communications systems in Europe are about to be deployed, intensive research is still carried out on all aspects related to UMTS. It is important to highlight that, in the early stages of development of UMTS, emphasis was given on developing the UTRA-FDD mode; however, it has been claimed that UTRA-TDD has special features that overcome some limitations of UTRA-FDD, namely the capacity for adapting in asymmetrical traffic scenarios, typical of some Internet applications [21][22]. For that reason, several research projects have focused on the development of UTRA-TDD-like systems [23][24][25].

In the UTRA-TDD mode there is a TDMA component in the multiple access scheme in addition to DS-CDMA and, in the framework of 3GPP, UTRA-TDD has two options, the 3.84Mcps and the 1.28Mcps. The 3.84 Mcps option is also referred to as wideband or high chip rate UTRA-TDD while the 1.28 Mcps option is commonly called narrowband or low chip rate UTRA-TDD [26]. Other differences between these two options can be found in the 3GPP specifications, particularly those in the 25 series [20]. For instance, it is worth mentioning that the narrowband UTRA-TDD option adopted by 3GPP was based on the TD-SCDMA proposal from China. In this proposal, some emphasis is given to the possible use of a type of antennas called smart antennas [27]. These types of antennas can be designed to steer a high gain of its radiation pattern (beams) into a particular direction and nulls into the undesired directions. This spatial filtering capacity of smart antennas has been utilized for reducing interference from other cells, thus increasing system capacity [28], as well as to provide the implementation of Spatial Division Multiple Access (SDMA) in which users spatially separated are allowed to access the medium at the same time.

Figure 2.7 exemplifies how the spatial filtering capacity of smart antennas can be used for implementation of SDMA-based systems.

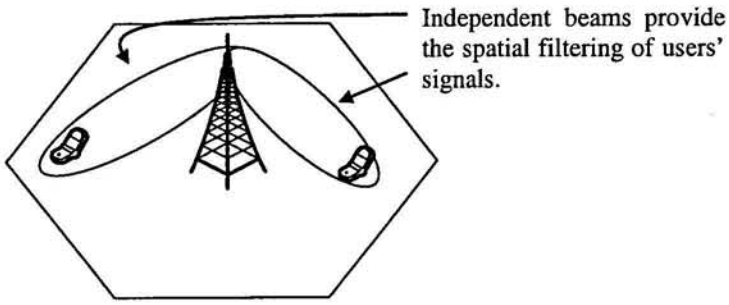

Figure 2.7 - Spatial filtering of smart antennas and SDMA-based systems

The present work exploits the spatial filtering capacity of smart antennas and uses the principle of operation of such antennas for solving the interference problem of wideband UTRA-TDD systems. Smart antennas as well as their use in mobile communications are discussed in the following section while the wideband UTRA-TDD is analysed in Chapter 3.

2.3 Smart Antennas in Mobile Communications

In its simplest form, antennas may be defined as a passive conductive device for transmitting and/or receiving signals (electromagnetic waves) of typical wireless systems such as radio and television broadcasting and mobile communications systems [29].

Several types of antennas have been cited in the literature; however, in general, they may be classified according to their radiation properties as omnidirectional and directional antennas. An omnidirectional antenna, also called isotropic antenna, has equal radiation in all directions, whereas directional antennas have more capacity of radiating or receiving signals in some specific directions. These radiation pattern properties can be achieved by using either a single antenna (single radiant element) or an aggregate of radiating elements in an arrangement called array. The arrangement of the array may be such that the radiation from the elements adds up to give high directivity (gain) in a particular direction or directions and low gains in other(s) [30]. This directional property allows arrays to be regarded as spatial filters, which allow signal from a certain direction to pass through while rejecting or stopping all other signal sources (from other directions) impinging on the array [31]. The spatial filtering capacity of array antennas can be particularly useful in environments like mobile communications systems where the desired user's signal must be separated from undesired signals.

In order to show how the spatial filtering capacity of array antennas is exploited in this thesis for improving the performance of mobile systems, this section covers the principle of operation of such antennas, namely the so-called smart antennas.

2.3.1 Spatial Filtering Capacity of Smart Antennas

In spite of polemical discussion about the precise meaning of the term smart antenna, a general consensus is that a smart antenna consists of two main parts: an array antenna and a signal processing unit, which provides some intelligence to the antenna. Clearly, the overall architecture of a smart antenna includes many other components [32]; however, these issues as well as the ones related to practical design and implementation are out of the scope of this thesis and they are not covered here.

Smart antennas can be designed to steer a high gain of its radiation pattern to a particular direction and low gains (nulls) to the undesired directions. To provide such directive patterns, it is necessary that the fields/signals from the elements of the array interfere constructively (add) in the desired direction(s) and interfere destructively (cancel each other) in the remaining space [30]. The direction of maximum gain, also referred to as look direction [28], can be controlled by electrical parameters and geometrical arrangements of elements of the array. Electrical parameters mainly include the amplitude and phase of excitation of the individual elements, while geometrical arrangements are associated with the relative positions of elements as well as the array geometry (linear, circular, two and three dimensional grid array) [30][33].

2.3.1.1 Beamforming

The process of combining the signals from different elements to point the maximum gain (beam) to a certain direction and nulls in others is referred to as beamforming or beam pointing. However, before describing the beamforming process, it is important to model the signal in which the beam former will act. For this purpose, let us consider a uniform array of M equidistant omnidirectional elements in the far field zone of L uncorrelated point sources of frequency f_0. The element spacing is equal to d and the array is aligned with the x-axis, as shown in Figure 2.8.

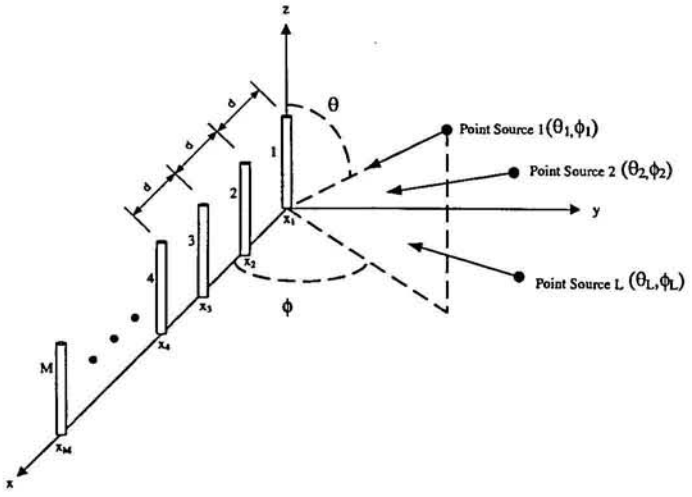

Figure 2.8 – Geometry of an array antenna for signal modelling

Considering the origin of the coordinates system as the time reference, a plane wave, radiated from the ℓ-th source in direction (θ_ℓ,ϕ_ℓ), arrives at the m-th element of the array after time

$$\tau_m(\theta_\ell,\phi_\ell)=\frac{\vec{r}_m\cdot\vec{v}(\theta_\ell,\phi_\ell)}{\upsilon} \tag{2.3},$$

where $\vec{r}_m$ is the position vector of the m-th element, $\vec{v}(\phi_\ell,\theta_\ell)$ corresponds to the unit vector in direction (θ_ℓ,ϕ_ℓ), υ represents the speed of propagation of a plane wavefront and $\cdot$ is the inner product. Although the principle of operation of smart antennas can be analysed using different array geometries in any coordinates system, for simplicity and without loss of generality, we use the rectangular coordinates system for analysing the linear array presented in Figure 2.8. Thus, for a rectangular coordinates system, equation (2.3) can be re-written as

$$\tau_m(\theta_\ell,\phi_\ell)=\frac{1}{\upsilon}\left[\left(x_m\vec{a}_x+y_m\vec{a}_y+z_m\vec{a}_z\right)\cdot\left(\cos\phi_\ell\sin\theta_\ell\vec{a}_x+\sin\phi_\ell\sin\theta_\ell\vec{a}_y+\cos\tilde{\theta}_\ell\vec{a}_z\right)\right]$$

$$\tau_m(\theta_\ell,\phi_\ell)=\frac{1}{\upsilon}\left[\left(x_m\cos\phi_\ell\sin\theta_\ell+y_m\sin\phi_\ell\sin\theta_\ell+z_m\cos\theta_\ell\right)\right] \tag{2.4}$$

For the case of Figure 2.8, $\vec{r}_m=x_m\vec{a}_x$ and, as a consequence, the time delay that a plane wavefront arrives at the m-th element before it arrives at the reference element in the origin of coordinates system is given by

$$\tau_m(\theta_\ell,\phi_\ell)=\frac{d}{\upsilon}(m-1)\cos\phi_\ell\sin\theta_\ell \tag{2.5}.$$

Assuming the spacing d between elements of the array is small enough, such that the amplitude differences between the signals received at different elements are negligible, the signals induced on each element of the array can be considered as $\tau_m(\theta_\ell,\phi_\ell)$ delayed versions of the signal on the reference element. In other words, if $u(t)$, which we let denote the physical bandpass signal transmitted by the point source ℓ that arrives on the reference element, is expressed by

$$u(t)=\Re\left\{m_\ell e^{j2\pi f_0 t}\right\} \tag{2.6},$$

the signal induced by the point source ℓ on the m-th element can be expressed as $u(t)=u\left[t-\tau_m(\theta_\ell,\phi_\ell)\right]$. In equation (2.6), $m_\ell(t)$ is the complex modulation function or complex envelope and $\Re\{.\}$ represents the real part of $\{.\}$ [9]. In general, the bandwidth of modulating function is narrow as compared with the array dimensions so that the approximation $m_\ell(t)\approx m_\ell\left[t-\tau(\phi_\ell,\theta_\ell)\right]$ holds [34]. Therefore, the time delay can be modelled as a shift phase and the complex envelope of the total signal induced on the m-th element due to all L sources can be expressed by [35]

$$x_m(t) = \sum_{\ell=1}^{L} m_\ell(t) e^{-j2\pi f_o \tau_m(\theta_\ell, \phi_\ell)} + \eta_m(t) \qquad (2.7).$$

In equation (2.7), $\eta_m(t)$ is the background random noise, which is assumed white with zero mean and variance equal to σ_η^2.

Once the total signal induced on the elements of the array is known, the array signal processing can be done. This processing consists in performing some manipulation on induced signals so that the antenna array can provide optimal reception in a certain direction of arrival (θ_ℓ, ϕ_ℓ) and reject signals from undesired directions. This manipulation corresponds to the steps carried out by the beam former block whose functioning is explained based on the block diagram shown in Figure 2.9.

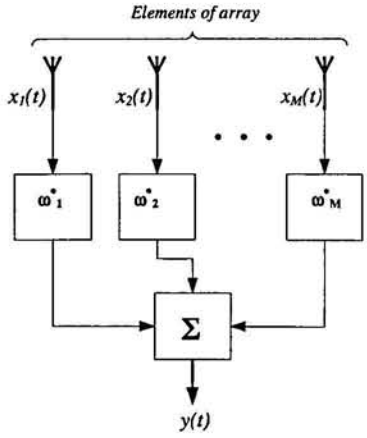

Figure 2.9 - Block diagram that exemplifies the functioning of a beam former.

The array output $y(t)$ is computed through the following equation:

$$y(t) = \sum_{m=1}^{M} \omega_m^* \cdot x_m(t) \qquad (2.8)$$

where ω_m^* is the complex conjugate weight of the beam former. In matrix form, equation (2.8) can be expressed as:

$$y(t) = \mathbf{w}^H \mathbf{x} \qquad (2.9).$$

The superscript ^{H} denotes the complex conjugate transpose of a vector or matrix, $\mathbf{x}$ is referred to as array signal vector and $\mathbf{w}$ is the array weight vector. The array signal vector $\mathbf{x}$ can also be written as:

$$\mathbf{x} = \sum_{\ell=1}^{L} m_\ell(t) \mathbf{a}(\theta_\ell, \phi_\ell) + \mathbf{n}(t) \qquad (2.10)$$

where $\mathrm{n} = [\eta_1(t) \quad \eta_2(t) \quad \ldots \quad \eta_M(t)]^T$ and $\mathrm{a}(\theta_\ell, \phi_\ell)$ is the steering vector or array response vector associated with the ℓ-th source in direction (θ_ℓ, ϕ_ℓ). The elements of steering vector represent the phase shift of the signal at the m-th antenna element, relative to the phase of the signal at the reference antenna element. By comparing with equation (2.7), the steering vector can be expressed as

$$\mathrm{a}(\theta_\ell, \phi_\ell) = \left[1 \quad e^{-j2\pi f_0 \tau_2(\theta_\ell, \phi_\ell)} \quad \ldots \quad e^{-j2\pi f_0 \tau_m(\theta_\ell, \phi_\ell)}\right]^T \tag{2.11}$$

Note that $\tau_1(\theta_\ell, \phi_\ell) = 0$, since the time reference is in the origin of the coordinates system. Let us assume now only one point source, that is, L=1. Thus, the output of the array is given by

$$y(t) = \sum_{m=1}^{M} \omega_m^* \cdot m_1(t) e^{-j2\pi f_0 \tau_m(\theta_1, \phi_1)} + \eta_m(t)$$

$$y(t) = m_1(t) \sum_{m=1}^{M} \omega_m^* e^{-j2\pi f_0 \tau_m(\theta_1, \phi_1)} + \eta_m(t) \tag{2.12}$$

or, alternatively

$$y(t) = m_1(t) f(\theta_1, \phi_1) + \eta_m(t) \tag{2.13}$$

where $f(\theta, \phi) = \sum_{m=1}^{M} \omega_m^* e^{-j2\pi f_0 \tau_m(\theta, \phi)}$ represents the array factor.

The array factor determines the gain of the array in the direction (θ_ℓ, ϕ_ℓ) and it is useful in describing the graphical representation of the radiation properties of the array. If the radiation patterns $g_a(\theta,\phi)$ of elements are identical, from the rule of pattern multiplication [31], the radiation pattern ($F(\theta, \phi)$) of the array is the product between the factor array $f(\theta,\phi)$ and the element radiation pattern. Equation (2.14) expresses such a relationship.

$$F(\theta, \phi) = g_a(\theta, \phi) \cdot f(\theta, \phi) \tag{2.14}$$

Therefore, when the antenna elements are all isotropic, the antenna array response is characterized by the array factor defined by equation (2.13) [31].

In terms of output power, the mean output power of the array is given by

$$P(\mathrm{w}) = E\{y(t) y^*(t)\} = \mathrm{w}^H \mathrm{R} \mathrm{w} \tag{2.15}$$

$E\{.\}$, in equation (2.12), denotes the expectation operator and R is the correlation matrix of the signals received by the M elements of the array. According to [34][35], R is defined as:

$$\mathrm{R} = \{\mathrm{x}\mathrm{x}^H\} = \sum_{\ell=1}^{L} p_\ell \mathrm{a}(\theta_\ell, \phi_\ell) \mathrm{a}^H(\theta_\ell, \phi_\ell) + \sigma_\eta^2 \mathrm{I} \tag{2.16}$$

where $p_\ell = E\left\{|m_\ell(t)|^2\right\}$ is the power of the ℓ-th source and I is the identity matrix.

From the analysis above, we can see that, by adjusting the weight coefficients ω_m^*, it is possible to vary the output of array as well as its associated power; that is, to point beams and nulls so that signals received from a certain direction are maximized or minimized. In order to illustrate such a process, let us consider the scenario shown in Figure 2.10.

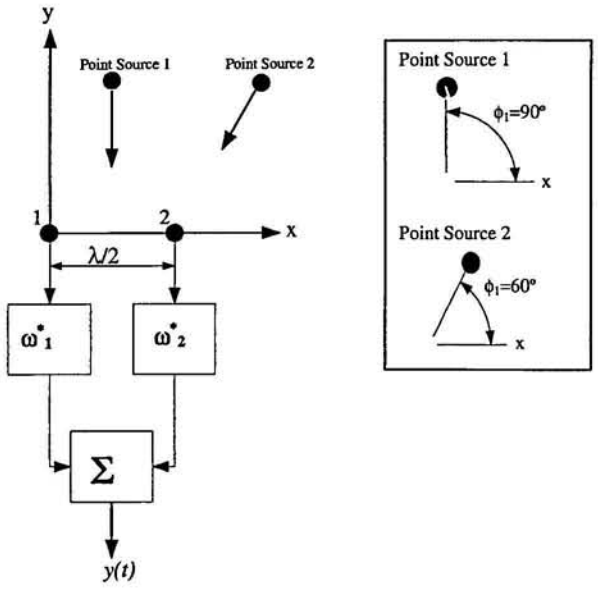

Figure 2.10 – Two elements array antenna with two point sources.

In Figure 2.10, the antenna array consists of two omnidirectional antenna elements having a spacing of $\frac{\lambda}{2}$, where λ is the wavelength of a plane wave. The point source 1 generates the desired signal $s(t)$ that arrives at the antenna array from the direction $\phi_1 = 90°$ and the point source 2 represents interfering source $i(t)$, whose signal arrives at the array from the direction $\phi_2 = 60°$ such as indicated in Figure 2.10. Both signals have the same frequency f_0. Assuming element 1 as the reference element of the array, the time delay experimented by the signals that impinge on the element 2 of the array is determined by equation (2.5) and is expressed as

$$\tau_2(\phi) = \frac{\lambda}{2\upsilon}\cos\phi \tag{2.17}$$

where, for simplicity, it was assumed that the waves arrive in the x-y plane (horizontal) so that $\theta = 90°$[4]. Based on these assumptions, the aim of the array system is to null[5] out the interfering

[4] As far as cellular systems environments are concerned, the distance between the base station and the users equipment (and interferers) are usually much larger than the base station height so that it is a common practice to consider $\theta \approx 90°$.

[5] In general, a beam former used for cancelling a plane wave arriving from a known direction (producing a null in the response pattern in this direction) is referred to as null-steering beamforming.

signal as well as to produce an output $y(t)$ equal to the desired signal $s(t)$. Using equation (2.8), the array output due to both signals can be expressed as

$$y(t) = y_1(t) + y_2(t) \tag{2.18}$$

where $y_1(t)$ represents the array output due to point source 1 or the desired signal and is given by

$$y_1(t) = s(t)\left(\omega_1^* + \omega_2^*\right) = s(t)\left[\left(\omega_{1,1} + \omega_{2,1}\right) + j\left(\omega_{1,2} + \omega_{2,2}\right)\right] \tag{2.19}$$

while $y_2(t)$ is the array output that corresponds to the interfering signal $i(t)$. For the scenario presented in Figure 2.10, the interfering signal $i(t)$ has a time delay of $\tau_2(\phi)$ at element 2 with respect to element 1 and, therefore, the array output due to the interfering signal can be written as

$$y_2(t) = i(t)\omega_1^* + i(t)e^{-j2\pi f_0 \tau_2(\phi=60°)}\omega_2^* = i(t)\left[\omega_{1,1} + j\omega_{1,2}\right] + i(t)e^{-j\frac{\pi}{2}}\left[\omega_{2,1} + j\omega_{2,2}\right] \tag{2.20}$$

To satisfy the constraint $y(t) = s(t)$, it is necessary that

$$\left.\begin{aligned} \omega_{1,1} + \omega_{2,1} &= 1 \\ \omega_{1,2} + \omega_{2,2} &= 0 \\ \omega_{1,1} + \omega_{2,2} &= 0 \\ \omega_{1,2} - \omega_{2,1} &= 0 \end{aligned}\right\} \tag{2.21}$$

Solving the system of equations (2.21) yields

$$\omega_{1,1} = 0.5\,,\ \omega_{1,2} = 0.5\,,\ \omega_{2,1} = 0.5\,,\ \omega_{2,2} = -0.5 \tag{2.22}$$

The radiation pattern[6] of the array is obtained from equation (2.14), and the result is shown in Figure 2.11.

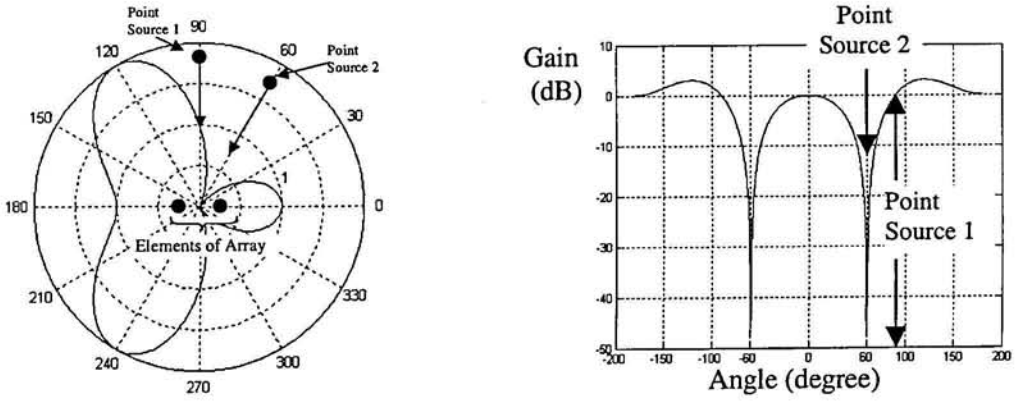

(a) (b)

Figure 2.11 – Characterization of radiation properties of an array antenna of two elements. (a) Polar and, (b) Rectangular representations.

[6] Recalling that the elements of the array are all isotropic, the radiation properties of an array antenna are characterized by the array factor [31].

As can be noted in Figure 2.11, a null is placed exactly at the direction of the interfering signal while the desired signal is received without any attenuation.

The previous example illustrates the use of the conventional beamforming scheme referred to as delay-and-sum beam former. In this conventional scheme, only the phases of signals are adjusted with the objective of pointing a beam at a desired direction and a null at direction of the interfering signal. All weights are of equal magnitude and determined based on the information about the direction of arrival of a desired plane wave.

Although this example corresponds to the simplest beamforming scheme, it is useful in describing how the beam and the null are formed by adjusting the complex weight coefficients. In fact, the major question about the beamforming process is related to how the complex weights are determined.

Several beamforming algorithms have been reported in the literature, which deal with the task of determining optimal values for the complex weights ω_m^* [13][34]. In such algorithms, the weights can be predetermined to form fixed orthogonal beams or they can be adaptively determined to adjust dynamically the beams to systems requirements [36]-[40]. Therefore, signals spatially separated can be discriminated by beams and/or nulls so that filtering can be performed in order to cancel some undesired signals and receive the desired ones [41].

As far as a mobile communications systems environment is concerned, this feature is particularly important since those systems are limited by the total interference due to other users rather than the background noise. By using the spatial filtering capacity of smart antennas, the interfering signals (co-channel interference) can be cancelled and, as a result, the overall system performance can be enhanced by improving the signal to interference ratio (SIR) [13][28]. Additionally, there are other benefits that attest the usefulness of smart antennas for mobile communications environments such as:

- Reduction in delay spread and multipath fading

  Delay spread is caused by multipath propagation where a desired signal arriving from different directions is delayed due to the different distances travelled. By using the spatial filtering feature of smart antennas, some of these delayed arrivals can be cancelled. In transmit mode, the energy is focused on directions of desired signals and, therefore, the multipath reflections are reduced causing a reduction in the delay spread. In receive mode, the compensation in multipath fading is performed by diversity combining [28].

- Spectrum efficiency and system capacity improvement

  Channel capacity refers to the maximum data rate that can be sustained on the given bandwidth. An improved channel capacity leads to more users of a specified data rate,

implying better spectrum efficiency. The increased quality of service that results from the reduced co-channel interference and reduced multipath fading upon using smart antennas may be traded for an increased number of users. Therefore, it has been reported in literature that the use of array antennas at base station increases the system capacity [42][43]. In cellular FDMA systems, which are fundamentally implemented based on reused distance criteria, the use of a smart antenna can provide reduction in co-channel interference and, therefore, it is possible to reduce the cluster size without severe degradation in the signal quality. By reducing the cluster size of the system, its capacity is increased [4].

Likewise, the use of smart antennas in TDMA systems also provides system capacity improvement. The spatial domain provided by smart antennas can be used in combination with the time domain in order to separate users and interferers in scenarios where a single domain is not able to cancel interference. For example, the spatial filtering capacity of smart antennas is able to filter users and interferers far from each other but would not be able to discriminate co-channel interference close to the desired user. However, this co-channel interference can be avoided by allocating the users in different timeslots; that is, imposing a separation in the time domain. Therefore, the system capacity, in terms of the total number of active users for a given scenario, can be maximized [44].

In CDMA-based systems, the number of users that a cell may be able to sustain increases manifold (on the order of the number of elements of the antenna) for a given outage probability and Bit Error Ratio (BER) [28][43]. According to [42], a gain of 2.4 in capacity can be achieved through with a four-element antenna, while [45] shows that the use of smart antennas can reduce the sensitivity of the radio-base-station receiver, which, in given circumstances, can be translated into a 250% capacity increase.

Additionally, smart antennas (array antennas) may be used to create additional channels by forming multiple beams without any extra spectrum allocation, which results in potentially extra users and thus increases the spectrum efficiency. In other words, smart antennas allow implementation of the Spatial Division Multiple Access (SDMA) as shown in Figure 2.7 in which users spatially separated access the medium simultaneously [1][7].

- Bit Error Ratio (BER) and signal quality improvements

  The Bit Error Ratio (BER) of a system normally reduces as the signal to interference ratio (SIR) is increased. As has already pointed out, smart antennas are able to reduce co-channel interference and multipath fading, thus increasing the signal to interference ratio. Therefore, in spite of modulation and coding schemes used, remarkable reductions in BER can be achieved by using smart antennas [46][47]. The reduction of BER yields a corresponding improvement in the received signal quality.

- Reduction in outage probability and increase in transmission efficiency

  Outage probability is the probability of a user being unable to access a given service due to abnormal conditions of system operation. Abnormal conditions occurs when the system is not capable of maintaining the requirements for establishing a call or providing a service. Among many other causes, the increase in BER can lead a system to an abnormal condition and, as a consequence, to an increase of the outage probability of users. As mentioned before, improvements in BER can be achieved by cancelling co-channel interferences and, therefore, reductions in outage probability can effectively be accomplished by using smart antennas [48]. Moreover, due to the directional property of smart antennas, the energy irradiated by such antennas can be concentrated in certain directions. In mobile communications, this fact may be exploited to increase the transmission efficiency in two ways: extending the coverage range of the cell or reducing the transmitted power of user equipment. By reducing the transmitted power, the users can extend the battery life and/or reduce the battery size and weigh of its equipment [49].

As can be noted, in the majority of cases, the improvements provided by using smart antennas are related with their capacity of eliminating co-channel interference. There are many other improvements that arise due to this capability [13][45]. Additional enhancements can be achieved with an antenna array together with other methods such as channel coding, diversity combining, adaptive equalization and interference cancelling [28]. Regarding mobile communications systems, the use of smart antennas has been considered in two major systems: switched beam system and adaptive array systems [50][51]. A switched beam system can provide a set of fixed beams, which can be selected according to a given criterion. This system divides the cell in sectors or micro-sectors that contain a predetermined and fixed beam. Figure 2.12 exemplifies the radiation properties of a typical switched beam system and shows a block diagram for this system.

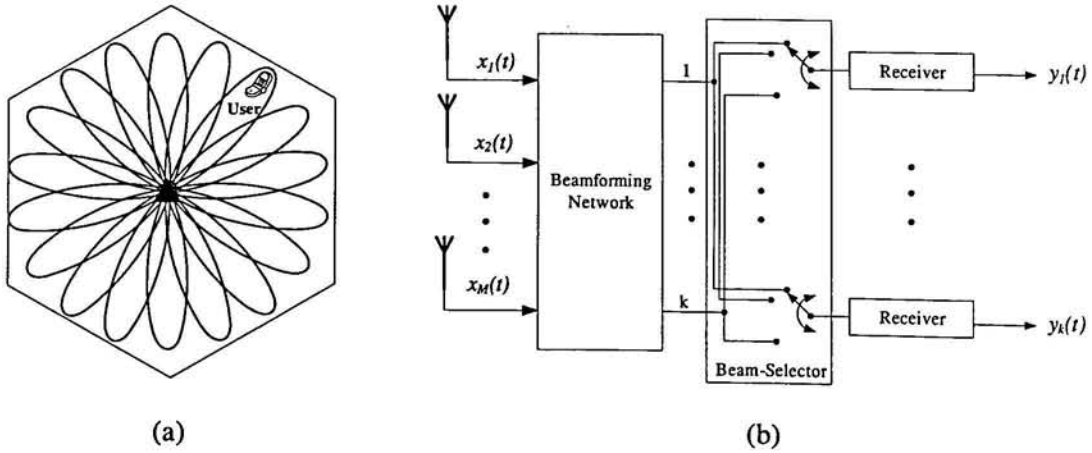

(a) (b)

Figure 2.12 – Switched beam systems. (a) Illustrative example of radiation pattern properties; (b) a block diagram of a switched beam system

Switched beam systems are implemented by means of a beamforming network and a beam selector. The beamforming network generates the beams, which are supposed to cover the entire area of the cell. Then, a beam-selection algorithm selects the beam that provides the largest signal enhancement and interference reduction. Switched beam systems are simple to implement and can be easily integrated in the existing cellular systems.

However, since the beams are fixed, if the user starts moving in a circular movement around the base station, it may experience a signal fluctuation. On the contrary, in adaptive array systems, the radiation pattern of systems is dynamically adapted in order to steer beams to desired signals and nulls to the interfering signals. The structure of an adaptive array system used in mobile communications systems is presented in Figure 2.13.

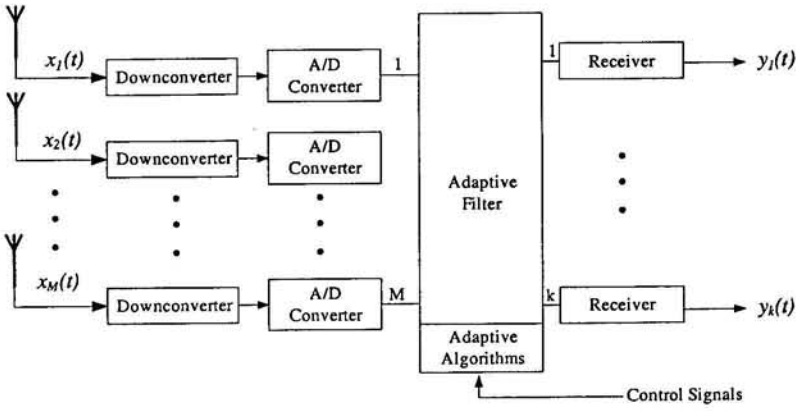

Figure 2.13 - Block diagram of an adaptive array system

The weights of the adaptive filter are adjusted by using control signals that can be the difference between the detected signal and an estimate or a replica of the signal [3]. Notable, the adaptive array systems are more complex and require more resources in signal processing. However, the ever-increasing evolution of digital technology has made feasible the use of digital beamforming techniques [52], reducing drastically the hardware requirements for the smart antenna system [53]. Even though this technological advance can reduce the size of electronic circuitry, cost as well as increase the antenna performance, at present the use of smart antennas seems to be more feasible at base stations than at the user equipment.

2.3.1.2 Remarks on the use of smart antennas in mobile communications systems

The analysis carried so far lead us to the following conclusions:

- spatial filtering provided by smart antennas is achieved by placing a beam in the direction of the desired signal and a null in the direction of interfering signals (as exemplified in Figure 2.11).

- the spatial filtering process is tightly related to the process of determining the complex weights or beamforming algorithms. Several works have been reported in literature, which deal with development of beamforming algorithms.
- there are many benefits that attest the potential of smart antennas for mobile communications environments, which can be translated into a remarkable improvement of system performance.
- smart antennas have already been proposed for use in mobile communications environments.

In addition to these conclusions, it should be noted that the potential of smart antenna systems is greatly enhanced when they are integrated with other aspects of system design such as power control algorithms, resource management, resource and channel allocation procedures and network planning techniques[45][54]-[56].

As mentioned before, this thesis does not deal with practical design and implementation of smart antennas, but instead exploits the spatial filtering feature provided by such antennas. In this work, this feature is used in its conceptual form for mitigating a certain type of co-channel interference and, throughout this work, it will be referred as the concept[7] of smart antennas. This concept, which combined with a Dynamic Channel Allocation (DCA) strategy, is used only at base stations.

2.4 Concluding Remarks

This chapter presented the main features of cellular systems. Emphasis was put on the most common multiple access methods, which allow users to simultaneously access the transmission medium or radio channel. Special care was devoted to the description of CDMA-based systems since, in addition to the fact that this multiple access technique is considered the most important technology for 3G mobile communications systems, this work was developed with CDMA-based on a CDMA-based system.

Advantages and drawbacks of such this technique were described as well as some methods used for combating the effect of multipath propagation on mobile channels and multi-user access interference (MAI).

This chapter has also shown that although interference from other-cells still represents a critical issue on cellular communications systems, this type of interference can be mitigated by adequately using the spatial filtering capacity of smart antennas. Thus, a detailed description of smart antennas and its use in mobile communications was carried out in the last part of this chapter.

[7] This concept has the exact meaning of spatial filtering and establishes that smart antennas can be designed to steer a high gain to a particular direction and nulls to the undesired directions. Nulls are considered as a position in the radiation pattern where the response is zero.

2.5 Chapter References

[1] V. K. Garg and, J. E. Wilkes, "Wireless and Personal Communications Systems", *Prentice-Hall, Inc.*, ISBN 0-13-234626-5, p.445, 1996.

[2] W.C.Y. Lee, "The Most Spectrum-Efficient Duplexing System: CDD", *IEEE Communications Magazine*, pp. 163-166, March 2002.

[3] M. D. Yacoub, "Wireless Technology: Protocols, Standards and Techniques", *CRC Press LLC*, ISBN 0-8493-0969-7, p. 568, 2002.

[4] W.C.Y. Lee, "Mobile Cellular Telecommunications", 2nd Edition, *McGRAW-HILL International Edition*, ISBN 0-07-038089-9, p.664, 1995.

[5] W.C.Y. Lee, "Overview of Cellular CDMA", IEEE Transaction on Vehicular Technology, Vol. 40, N° 2, pp.291-302, May 1991.

[6] J. Scourias, "A Brief Overview of GSM", available at http://kbs.cs.tu-berlin.de/~jutta/gsm/js-intro.html - Accessed on December 2003.

[7] T. S. Rappaport, "Wireless Communications: Principles & Practice – 2nd Edition", Prentice-Hall PTR, Inc., ISBN 0-13-042232-0, p.707, 2002.

[8] K. Feher, "Wireless Digital Communications: Modulation and Spread Spectrum Applications", *Prentice-Hall, Inc.*, ISBN 0-13-098617-8, p.524, 1995.

[9] L.W. Couch II, "Digital and Analog Communication Systems", 5th Edition, *Prentice-Hall*, Inc., ISBN 0-13-522583-3, p. 742, 1997.

[10] S. Haykin, "Communication System", 3rd Edition, *John Wiley & Sons, Inc.*, ISBN 0-471-57178-8, p. 872, 1994.

[11] R. L. Pickholtz, D.L. Schilling and L.B. Milstein, "Theory of Spread Spectrum Communications – A Tutorial", *IEEE Transactions on Communications*, Vol. COM-30, No. 5, May 1982.

[12] T. Ojanperä, R. Prasad, "An Overview of Air Interface Multiple Access for IMT-2000/UMTS", IEEE Communications Magazine, pp.82-95, September 1998.

[13] J.S. Blogh and L. Hanzo, "Third-generation Systems and Intelligent Wireless Networking-Smart Antennas and Adaptive Modulation", *John Wiley & Sons*, Ltd, ISBN 0470-84519-8, 2002.

[14] S Moshavi, "Multi-user Detection for DS-CDMA Communications", *IEEE Communications Magazine*, Vol. 34, No. 10, PP. 124-136, October 1996.

[15] A. Duel-Hallen, J. Holtzman, Z. Zvonar, "Multi-user Detection for CDMA Systems", *IEEE Personal Communications*, Vol. 2, No. 2, pp. 46-58, April 1995.

[16] M. Vollmer, M. Haardt, J. Gotze, "Comparative Study of Joint-Detection Techniques for TD-CDMA Based Mobile Radio Systems", *IEEE Journal of Selected Areas on Communications*, Vol. 19, No. 8, pp. 1461-1475, August 2001.

[17] N. Chandran and M. C. Valenti, "Three Generation of Cellular Wireless Systems", *IEEE Potentials*, Vol. 20, no. 1, pp. 32-35, Feb./March 2001.

[18] H. Holma and, A. Toskala, "WCDMA for UMTS: Radio Access for Third Generation Mobile Communications", 2nd Edition, *John Wiley & Sons*, Ltd., ISBN 0-470-84467-1, p.391, 2002.

[19] E. Fukuda, A. Noda, M. Higuchi, "Overview of Global Standardization of IMT-2000 and Its Evolution", *FUJITSHU Scientific & Technological Journal*, Vol.38, No. 2, pp.238-253, December 2002.

[20] http://www.3gpp.org – Accessed on December 2003.

[21] R. Esmailzadeh, M. Nakagawa, "TDD-CDMA for Wireless Communications", *Artech House*, Inc., ISBN 1-58053-371-X, p.176, 2003.

[22] R. Esmailzadeh, M. Nakagawa, A. Jones, "TDD-CDMA for the 4th Generation of Wireless Communications", *IEEE Wireless Communications*, pp.8-15, August 2003.

[23] http://www.eurescom.de/ - Accessed on December 2003.

[24] www.arrows-ist.upc.es - Accessed on December 2003.

[25] http://www.ist-daidalos.org/ - Accessed on February 2004.

[26] 3GPP TR 25.928 v4.0.1 (2001-03), "1.28 Mcps Functionality for UTRA TDD Physical Layer"

[27] K. Kammerlander, "Benefits and Implementation of TD-SCDMA", *Proceedings of International Conference on Communication Technology*, WCC-ICCT 2000, Vol.2, pp. 1013-1016, Aug. 2000.

[28] L. C. Godara, "Applications of Antenna Arrays to Mobile Communications, Part I: Performance, Improvement, Feasibility, and System Considerations", *Proceedings of the IEEE*, Vol. 85, No. 7, pp. 1031-1060, July 1997.

[29] J. K. Petersen, "The telecommunications Illustrated Dictionary - 2nd Edition", *CRC Press*, ISBN 0-8493-1173X, p.1088, 2002.

[30] C. A. Balanis, "Antennas Theory – Theory and Application", 2nd Edition, *John & Wiley Sons, Inc.*, ISBN 0-471-59268-4, p.941, 1997.

[31] Boon Poh Ng and Meng Hwa Er, "Basic Array Theory and Pattern Synthesis Techniques", *In Handbook of Antennas in Wireless Communications* - Edited by L.C. Godara, *CRC Press*, ISBN 0-8493-0124-6, p.936, 2002.

[32] T. Bao Vu, "Smart Antennas System Architecture and hardware Implementation", *In Handbook of Antennas in Wireless Communications* - Edited by L.C. Godara, *CRC Press*, ISBN 0-8493-0124-6, p.936, 2002.

[33] P.H. Lehne and M. Pettersen, "An Overview of Smart Antenna Technology for Mobile Communications Systems", *IEEE Communications Surveys*, 4th Quarter, Vol.2, No.4, pp.2-13, 1999.

[34] L. C. Godara, "Applications of Antenna Arrays to Mobile Communications, Part II: Beamforming and Direction-of-arrival Considerations", *Proceedings of the IEEE*, vol.85, n0.8, pp. 1195-1245, August, 1997.

[35] P. Cardieri, "Resource Allocation and Adaptive Antennas in Cellular Communications", *PhD Thesis, Faculty of the Virginia Polytechnic Institute and State University*, September 2000, USA.

[36] S. Bellofiore, C.A. Balanis, J. Foutz and A. Spanias, "Smart-Antenna Systems for Mobile Communication Networks- Part 2: Beamforming and Network Throughput", *IEEE Antennas and Propagation Magazine*, Vol.44, No. 4, pp. 106-114, August 2002.

[37] R. M. Bueher, A. G. Kogiantis, Shang-chich Lin, Jiann-an Tsai and D. Uptegrove, "Intelligent Antennas for Wireless Communications – Uplink", *Bell Labs Technical Journal*, Vol. July-September, pp.73-103, 1999.

[38] S. P. Applebaum, "Adaptive Arrays", *IEEE Transaction on Antennas and Propagation*, Vol. AP-24, No.5, pp.585-598, 1976.

[39] Weon-cheol Lee, S. Choi, J. Choi, M.Suk, "An Adaptive Beamforming Technique for Smart Antennas in WCDMA System", *IEICE Transaction on Communication*, Vol.E86-B, No.9, pp.2838-2843, September 2003.

[40] W. F. Gabriel, "Adaptive Processing Array Systems", *Proceedings of the IEEE*, Vol.80, No. 1, pp.152-162, January 1992.

[41]B. D. Van Veen, K. M Buckley, "Beamforming: A Versatile Approach to Spatial Filtering", *IEEE ASSP Magazine*, pp.4-24, April 1988.

[42]K. I. Pedersen, P. E. Mogensen, J.Ramito-Moreno, "Application and Performance of Downlink Beamforming Techniques in UMTS", *IEEE Communications Magazine*, pp.134-143, October 2003.

[43]S. C. Swales, M.A. Beach, D.J. Edwards and, J.P. Mcgeehan, "The Performance Enhancement of Multibeam Adaptive Base-Station Antenna for Cellular Land Mobile Radio Systems", *IEEE Transactions on Vehicular Technology*, Vol.39. N° 1, pp. 56-67, February 1990.

[44]A. L. S. Castro, J. Ruela, "Autonomous Dynamic Resource Allocation for TD/CDMA-TDD Systems", *Proceedings of the 6th International Symposium on Wireless Personal Mobile Communications*, WPMC'03, Japan, October 2003.

[45]Ahmed El Zooghby, "Potentials of Smart Antennas in CDMA Systems and Uplink Improvements", *IEEE Antennas and Propagation Magazine*, Vol. 43, No. 5, pp.172-177, October 2001.

[46]S. Chen, L. Hanzo, N. N. Ahmal, "Adaptive Minimum Bit Error Rate Beamforming Assisted Receiver for Wireless Communication", *Proceedings of 9th Annual Conference of Chinese Automation and Computing Society in UK*, 2003.

[47]Shiann-Shiun Jeng, Chia-Yuan Huang and, Chih-Yang Lai, "Performance Evaluation of Smart Antenna for Third Generation W-CDMA Systems", *IEICE Transactions on Communications*, Vol.E86-B, No.2, pp. 818-828, February 2003.

[48]R. Lopez, "Performance Prediction for Cellular Switched-Beam Intelligent Antenna Systems", *IEEE Communications Magazine*, pp. 152154, October 1996.

[49]S. A. Harbin, B. K. Rainer, "A Low-Power Wireless Mobile Communications System", *Proceedings of 44th IEEE Vehicular Technology Conference*, Vol. 1, pp. 673-676, 1994.

[50]S. Bellofiore, C.A. Balanis, J. Foutz and A. Spanias, "Smart-Antenna Systems for Mobile Communication Networks- Part 1: Overview and Antennas Design", *IEEE Antennas and Propagation Magazine*, Vol.44, No. 3, pp. 145-154, June 2002.

[51]M. Chryssoumallis, "Smart Antennas", *IEEE Antennas and Propagation Magazine*, Vol. 42, No. 3, pp.129-136, June 2000.

[52]T. W. Nuteson, G. S. Mitchel, "Digital Beamforming for Smart Antennas", *IEEE MTT-S Digest*, pp.125-128, 2001.

[53]J. D. Fredrick, Y. Wang, T. Itoh, "A Smart Antenna Receiver Array Using a Single RF Channel and Digital Beamforming", *IEEE Transaction on Microwave Theory and Techniques*, Vol. 50, No. 12, December 2002.

[54]M. Frullone, P. Grazioso, C. Passerini, G. Riva, "Usage of Adaptive Arrays to Solve Resource Planning Problems", *Proceedings of 46th IEEE Vehicular Technology Conference*, Vol. 1, pp. 527-530, April-May 1996.

[55]A. O. Boukalov, Sven-Gustav Häggman, "Systems Aspects of Smart-Antenna Technology in Cellula Wireless Communications – An Overview", IEEE Transactions on Microwave Theory and Techniques, Vol. 48, No.6, pp.919-929, June 2000.

[56] S.H. Marikar and L.A. DaSilva, "Resource Management in Third Generation Mobile Communication Systems Employing Smart Antennas" *Proceedings of the IEEE INFOCOM 2002*, pp. 1461-1469, June 2002.

3
UMTS and UTRA-TDD Radio Interface

3.1 Introduction

This chapter is aimed at providing a description of Universal Mobile Telecommunication System (UMTS). It emphasizes the main aspects that are useful to understand this work, mainly those related with the UTRA-TDD air interface. The description that follows is in accordance with 3GPP specifications.

3.2 UMTS services and applications

Compared with 2G systems, the great jump promised by third generation (3G) mobile communications systems such as UMTS is the capability of supporting high bit rate services with the notion of negotiated traffic and Quality of Service (QoS) characteristics. This capacity enables the introduction of new services and applications, ranging from real-time multimedia services to different levels of data services. Depending on how these services and applications are considered, they can be classified in different categories or divided into different groups. In the framework of 3GPP, four traffic classes or UMTS QoS classes have been identified [1] [2]:

- Conversational class

  Conventional voice communication, Voice over IP (VoIP) and video conferencing are the main applications that characterize this traffic class. In these Real-Time (RT) conversational services, the end-to-end delay is expected to be low and the traffic can be considered symmetric or nearly symmetric. The symmetry of traffic means that equal or approximately equal resources are used for uplink and downlink transmissions.

- Streaming class

  On-demand multimedia streaming is one of the newcomer applications in data communications. It is a technique for transferring data such that it can be processed and played as a steady and continuous stream, while transfer takes place. Streaming applications are very asymmetric and therefore typically withstand a higher delay than the symmetrical conversational services. Streaming video and streaming audio are the most common applications of this class.

- Interactive class

Interactive traffic is related to a classical data communications model that, on an overall level, is characterized by the response pattern of the end-user. The end-user can be either a machine or a human. Web browsing, database retrieval, computer games[8] and server access applications are examples of human interaction while pooling for measurement records and automatic data base enquiries (tele-machines) are examples of machine interaction. Typical asymmetrical interactive applications do not tolerate loss of data but they are delay-tolerant to a certain extent.

- Background class

  Background traffic is characterized by the fact that the destination is not expecting data within a certain time or tight deadline. This means that such traffic does not require immediate action and can be delivered in background. Typical background applications include electronic mail (e-mail) delivery, Short Messaging Service (SMS) and Multimedia Messaging Service (MMS), download of databases and reception of measurements records. Background applications are more or less insensitive to delivery time but data must be received without errors (error control techniques, based on the retransmission of erroneous or missing data, are required and typically performed by Transport layer protocols).

The main distinguishing factor of the previous classes is how delay-sensitive the traffic is. Conversational class is meant for traffic that is very delay sensitive while background class is the most delay insensitive traffic class. The fundamental characteristics of these classes are summarized in Table 3.1.

Traffic Class	Fundamental Characteristic for QoS	Example of application
Conversational	• Preserve time relation (variation) between information entities of the stream • Conversational pattern (stringent and low delay)	Voice VoIP Video Conferencing
Streaming	• Preserve time relation (variation) between information entities of the stream	Streaming audio Streaming video
Interactive	• Request response pattern • Preserve payload	Web browsing Games
Background	• Destination is not expecting the data within a certain time	e-mail, SMS, MMS, download of databases

Table 3.1 - UMTS QoS classes

However, it must be noted that the wide variety of applications requires different QoS requirements that the network must satisfy. In UMTS, these requirements are managed by introducing a concept of service capabilities. The service capabilities are bearer services, which include all aspects that

[8] Depending on the nature of a game (how intensive data transfer is), computer games may rather belong to the conversational class due to stringent requirements for the maximum allowed end-to-end delay.

enable the provision of a contracted QoS. In others words, bearer services are defined by parameters (e.g. QoS attributes) and mechanisms needed to support services. The bearer service attributes include the type of application for which the bearer service is optimised, maximum number of bits delivered by and to network, the guaranteed bit rate, the maximum delay and the bit error rate. Other bearer services attributes can be found in [1].

It is worth highlighting that in UMTS, either users or applications are allowed to negotiate at connection set up the bearer characteristics that are most appropriate for carrying the information. Renegotiation of such characteristics is also possible during the connection and it can be requested by the application or the network [2].

The bearer services are depicted in the framework of 3GPP as a layered architecture whose aim is to provide end-to-end QoS guarantees to users in the network. Each bearer service on a specific layer offers its individual services using services provided by the layers below. Figure 3.1 shows the UMTS QoS architecture as describe in 3GPP specification [1].

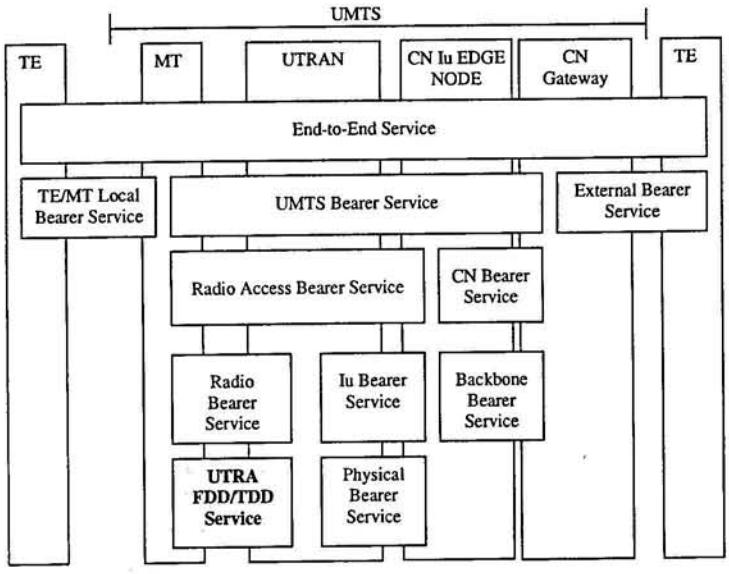

Figure 3.1 - UMTS QoS Architecture

Figure 3.1 describes how the network provides QoS. The end-to-end QoS is the most important criterion from an end user's perspective and is divided into three parts – Terminal Equipment (TE)/Mobile Termination (MT) local bearer service, UMTS bearer service, and external bearer service.

The TE/MT local bearer service enables communication between the different components of a mobile station (user equipment). These components are a MT, mainly responsible for a physical connection to the UTRAN through the air interface, and one or several attached end user devices (TE), such as laptops or mobile phones. The external bearer service connects the UMTS core network and the destination node located in an external network. This service may use IP transport or other alternatives [3].

The UMTS bearer service uses the Radio Access Bearer Service (RAB) and Core Network (CN) Bearer Service. The RAB and CN bearer service reflect the optimized ways to realize the corresponding bearer service taking into account mobility and mobile subscriber profiles.

The CN bearer service controls and utilizes the backbone service while RAB provides confidential transport of signalling and user data between MT and CN. The RAB consists of Iu bearer service and radio bearer service. The Iu bearer service provides transport between the UMTS Terrestrial Radio Access Network (UTRAN) and CN. The radio bearer services deal with all aspects of radio interface transport and use both air interfaces UTRA-FDD or UTRA-TDD.

As a conclusion of the previous description, it is evident that in order to provide end-to-end QoS, all bearer services in Figure 3.1 must have their associated QoS parameters defined. As far as UMTS bearer services are concerned, the maintenance of negotiated QoS is related with the performance of air interface, radio access networks and core network [3]. For example, a user requests a service with a certain QoS characteristic to the network. The network checks the available resources and informs the user that the requested QoS can be supported by a certain radio access bearer service. The user accepts the offer and starts using the service. However, the air interface is not fully optimized for adverse propagation conditions or interference scenarios, which means that the signal interference ratio (SIR) decreases very easily. Thus, the agreed QoS may deteriorate since, for example, the radio bearer service BER begins to increases. In this case, the network should be able to normalize the contracted QoS. If the initial conditions are not restored, the network can opt to renegotiate the QoS characteristics with the user or, otherwise, the service can be interrupted.

This was an example where the performance of the air interface may affect the quality of service. On the other hand, if the air interface is improved to deal with undesirable conditions, the QoS characteristics may be maintained and the service does not need to be interrupted or renegotiated.

This work addresses this subject, i.e., the improvement of the air interface (highlighted block in Figure 3.1) in such a way that the QoS characteristics are not affected by changes in the interference scenario, for example. For this purpose, the following section describes the air interface of UMTS with emphasis on the UTRA-TDD air interface.

3.3 The Overall Architecture of UMTS

Universal Mobile Telecommunication Systems (UMTS) system architecture as specified by the 3rd Generation Partnership Project (3GPP) includes user equipment (UE), UMTS terrestrial radio access network (UTRAN), and a Core Network. Furthermore, the general architecture contains two general open interfaces: the interconnection point between an RNC and a Core Network referred to as Iu interface and the radio interface between UTRAN and the User Equipment, called Uu. The

radio interface is based on the well-known Wideband CDMA (WCDMA) technology and, in the framework of 3GPP, it is also called Universal Terrestrial Radio Access (UTRA). UTRA has two modes characterized by the duplex method: FDD (frequency duplex division) and TDD (time duplex division) that operate with pair and unpaired bands, respectively. UTRA-TDD is very similar to the UTRA-FDD systems in all of its higher-level functionalities. The major differences are confined to the physical layer, which will be further analyzed, in detail. In this way, the UMTS system will be described based on Figure 3.2, which shows the network components of UMTS systems as well as the main interfaces that connect them.

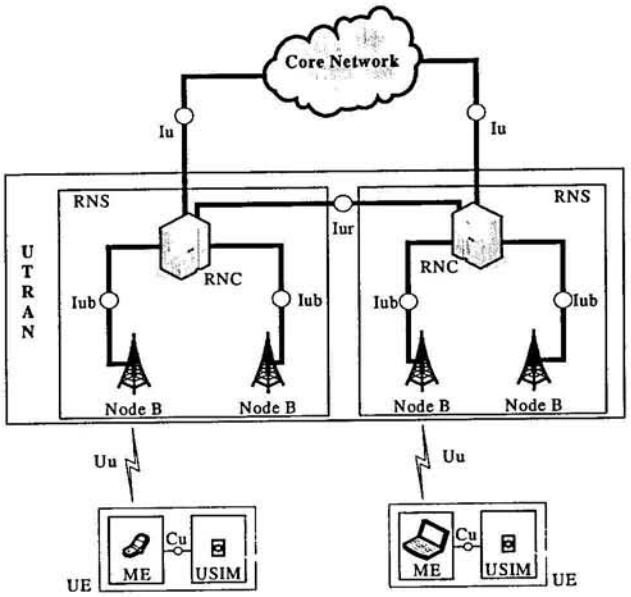

Figure 3.2 - UMTS system architecture.

From the specification and standardisation point of view, Core Network (CN) is an architectural term related to the part of UMTS that is independent of the connection technology of the terminal (e.g. radio, wired) [4]. In the framework of 3GPP, the technical specifications are based on evolved GSM core networks and, according to [2], they also connect the UTRAN with other networks, such as: ISDN and PSTN networks (Circuit Switching (CS) networks) and Internet (Packet Switching (PS) network).

User Equipment (UE), as shown in Figure 3.2, performs the interfacing between the final user and the radio interface UTRAN. UE consists of two parts: Mobile Equipment (ME) that is the radio terminal used for communication over the Uu radio interface and the UMTS Subscriber Identity Module (USIM), which is a smartcard that holds some subscription information such as authentication and encryption keys [5].

As it can be noted, the entire communication process between the UE and the CN is carried out through the UTRAN. Therefore, the UTRAN performs all radio-related functions to support such a communication process and also provides total isolation of all radio issues from the Core Network.

The UTRAN consists of a set of Radio Network Subsystems (RNS) connected to the Core Network through an interface called Iu. A RNS[9] consists of two types of nodes: one or more entities known as Node B and a Radio Network Controller (RNC).

Node B corresponds to the well-known GSM base station [2] and it is an entity supporting radio frequency transmission and reception and system access information broadcast. It also performs the air interface processing such as channel coding and interleaving, rate adaptation, spreading, radio resource management operation, as in inner loop power control. Node B is connected to the RNC through the Iub interface and to the UE by using the Uu radio interface.

Radio Network Controller (RNC) is the entity that owns and controls all radio resources in its domain constituting the service access point for all services that the UTRAN provides to the CN, for example, controlling the Node Bs and managing of connections to the UE. In accordance with this functionality, two main logical roles are defined for the RNC, to serve and to control. The Serving RNC (SRNC) has the control of the UE that is connected to the UTRAN. It manages the connection on the Iu interface for the UE and it terminates several protocols in the contact between the UE and the UTRAN. The Controlling RNC (CRNC) has the overall control of a particular set of cells, and their associated base stations. When a UE needs to use resources in a cell not controlled by its Serving RNC, the Serving RNC asks the Controlling RNC for those resources. This request is made via the Iur interface, which connects the RNCs with each other. In this case, the Controlling RNC is also said to be a Drift RNC (DRNC) for this particular UE.

According to the previous description, the UTRAN seems to be the kernel of the UMTS system and thus it executes several functions. A complete list of UTRAN functions as well as their descriptions can be found in [5]. In the scope of this work, it is worth highlighting those functions related to the management of the air interface resources. Such functions are carried out by a set of so-called Radio Resource Management (RRM) algorithms: handover control (HC), power control (PC), admission control (AC), load control (LC) and packet schedule (PS). Typically, these algorithms are distributed among UTRAN entities. RNC is manly responsible for executing handover, packet schedule, admission and load control, whereas Node B is concerned with power control. As far as the UTRA-TDD component is concerned, the RRM algorithms embody another algorithm called Dynamic Channel Allocation (DCA). This algorithm is used for allocating resources to cells (slow DCA) and to bearer services (fast DCA). The channel allocation algorithm is distributed and implemented on both RNC (fast DCA) and Node B (slow DCA) [6].

This work is also concerned with the development of a novel DCA strategy and, as it has already been pointed out, it is a specific mechanism of UTRA-TDD systems. For that reason, emphasis will be given in describing these two subjects. The following section covers the issues related to UTRA-

[9] Optionally, a RNS can include another entity called Stand-Alone SMLC (SAS))

TDD systems, while DCA strategies as well as RRM algorithms are described and analyzed in chapter 4.

3.4 UTRA-TDD Radio Interface

The air interface of the UMTS system, also called Universal Terrestrial Radio Access (UTRA), is based on Direct-Sequence Code Division Multiple Access (DS-CDMA). UTRA supports two duplex modes: FDD for operating with paired bands whereby uplink and downlink transmissions use two separated radio frequencies and TDD for unpaired bands whereby uplink and downlink transmissions are carried over the same radio frequency by using synchronised time intervals. UTRA TDD uses a combined time division and code division multiple access that adds a TDMA component to DS-CDMA and, thus, the multiple access has been also often denoted as TDMA/CDMA. UTRA-FDD is designed to operate over a 5MHz bandwidth, while UTRA-TDD has either 5MHz or 1.6 MHz options for the operating bandwidth. In the framework of 3GPP, the term Wideband CDMA refers to UTRA-FDD and UTRA-TDD with 5MHz bandwidth, whereas the term Narrowband CDMA is attributed to the 1.6MHz UTRA-TDD option [7]. This section is only aimed at describing the wideband option, hereafter referred to as UTRA-TDD. Occasional references to the 1.6 MHz option are indicated as UTRA-TDD-1.28[10].

The protocol stack of the radio interface between UTRAN and UE consists of a number of protocol layers, each ofering specific services to the other layers. These services are offered at access points called Service Access Points (SAPs). Figure 3.3 shows the radio interface protocol architecture [8] with the SAPs indicated by grey ellipses.

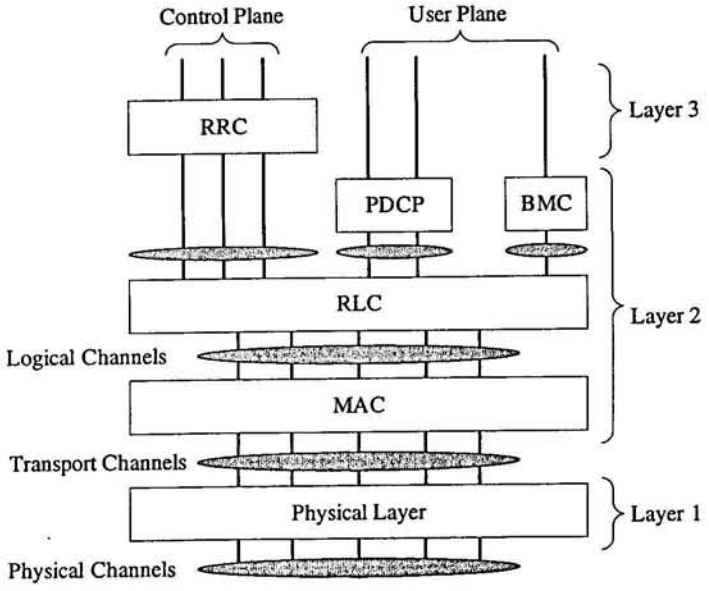

Figure 3.3 - Radio interface protocol architecture

[10] The number 1.28 represents the chip rate (in Mcps) used for the 1.6 MHz UTRA-TDD option.

The radio interface protocol is layered into three protocol layers, which are defined into two planes. The Control Plane (CP) is used for all UMTS-specific control signaling and the User Plane (UP) deals with transmission and reception of all user-related information.

Regarding the protocols, all layer 3 and layer 2 protocols are basically common for UTRA-TDD and UTRA-FDD [9]. The main differences are confined to the physical layer and in the Uu air interface. Although this section is focused on describing the UTRA-TDD physical layer, Layer 3 and Layer 2 are briefly described, as well.

3.4.1 Layer 3 or Network Layer

Layer 3 mainly consists of Radio Resource Control (RRC) functions. The RRC protocol handles the control plane signalling between UTRAN and UE. It is used for setting up, modifying and releasing of radio resources, as well as for controlling and monitoring the requested and assigned Quality of Service (QoS). Since the RRC protocol controls the available radio resources, it is important to emphasize that most of the functions carried out by the RRC protocol are part of the RRM algorithms. Thus, as far as UTRA-TDD system is concerned, the RRC protocol embodies some specific functionality, which includes the allocation of resources to cells (slow DCA) and Timing Advance (TA) control for UTRA-TDD timeslots.

A complete list of functions as well as the description of them can be found in the 3GPP specification [10]. The RRC protocol interacts with Layer 2 through signalling radio bearers.

3.4.2 Layer 2 or Data link Layer

Layer 2 transports traffic from layer 3 to the physical layer, and performs some control functions, such as streaming, scheduling, buffering, and QoS management.

This layer is divided into four sub-layers: Medium Access Control (MAC) and Radio Link Control (RLC) which are involved in the traffic transport itself and Broadcast/Multicast Control (BMC) and Packet Data Convergence Protocol (PDCP) that are required for broadcast functions and Internet Protocol (IP) header compression.

- Broadcast/Multicast Control (BMC)

  Broadcast/Multicast Control (BMC) exists only in the user plane and is located above RLC. This protocol provides services for cell broadcast, equivalent to the short message service cell broadcast (SMS-CB) service of GSM.

  The main functions of BMC protocol are: storage of cell broadcast messages, traffic volume monitoring and radio resource request for cell broadcast services, scheduling of BMC messages, transmission of BMC messages to UE and delivery of cell broadcast messages [11].

- Packet Data Convergence Protocol (PDCP)

  This layer exists only in the user plane and is defined for the Packet Switching (PS) domain only. It performs the header compression/decompression functions for network protocols, i.e., for the Internet protocol IPv4 and IPv6. The compression is carried out in the header that is passed to the physical layer, and decompression is performed in header that is received from the physical layer. Additionally, this layer also executes functions related to transfer of data between PDCP users and maintenance of PDCP sequence numbers for radio bearers, which are configured to support lossless reallocation of the serving radio network subsystem (SRNS) [12].

- Radio Link Control (RLC)

  This layer is responsible for data transfer between the MAC layer and higher layers for both user and control data. Data transfer is performed in one of three modes: transparent, acknowledged and unacknowledged. In the transparent mode, the higher-layer protocol data units (PDUs) are transmitted without the inclusion of extra protocol information, though in special cases transmission with limited segmentation and reassembly capability can be accomplished. In the acknowledged mode, Automatic Repeat Request (ARQ) functionality is used for reliable data transfer. Additionally, this mode also supports in-sequence and out-of-sequence delivery of high layer PDUs. On the other hand, in the unacknowledged mode, no retransmission protocol is used and data is delivered without guarantee. Ciphering for security is another function performed by RLC [13].

  As shown in Figure 3.3, the two Layer 2 protocols (RLC and MAC) interact with each other via SAPs, which are called logical channels. These channels provide data transfer between the two entities and are characterized by the type of information they convey. Logical channels are described as the services provided by MAC to RLC [14]. For that reason, they are described in the following, along with MAC description.

- Medium Access Control Protocol

  The MAC layer provides data transfer services to upper layers via SAPs known as logical channels and interfaces with the physical layer through SAPs identified as transport channels. Therefore, the mapping of logical channels onto transport channels as well as the selection of appropriate Transport Formats[11] (TFs), for each transport channel, are executed by the MAC layer. As far as the logical channels are concerned, they are classified into two groups: control channels and traffic channels. Control channels are used for the transfer of control plane information, performing functions for broadcasting information system, paging, transmitting

[11] Formally, it is defined as a format offered by physical layer to MAC (and vice versa) for the delivery of a transport blocks or MAC PDUs during a Transmission Time Interval (TTI) on a Transport Channel.

information between UE and the network, and vice-versa. Table 3.2 summarizes the logical channels as specified in the 3GPP specification for UTRA-TDD [14]. Traffic channels are used to transfer user plane information and for sending or receiving information to one or a group of UEs. Except for the Shared Channel Control Channel (SHCCH), all logical channels shown in Table 3.2 also apply to the UTRA-FDD mode.

Control Channels	Broadcast Control Channel (BCCH) Paging Control Channel (PCCH) Common Control Channel (CCCH) Dedicated Control Channel (DCCH) Shared Channel Control Channel (SHCCH)
Traffic Channels	Dedicated Traffic Channel (DTCH) Common Traffic Channel (CTCH)

Table 3.2 - Logical channels for UTRA-TDD

The logical channels are mapped onto transport channels. The transport channels are defined by how and with which characteristics data is transferred over the air interface. Like logical channels, transport channels are divided into two types: dedicated and common transport channels. Common channels are shared by all or by a group of UEs and are defined for uplink or downlink direction. Nevertheless, the dedicated channel (DCH) is defined for both uplink and downlink directions and is used to carry user or control information between the UTRAN and a UE. The DCH may be transmitted over the entire cell or over only a part of it by using beam-forming antennas. In addition, DCH is able to perform features on a frame-by-frame basis such as fast power control and fast data rate. Table 3.3 shows the two types of transport channels used for the UTRA-TDD mode [15]. For UTRA-FDD, an uplink Common Packet Channel (CPCH) is added to the common channels and the Uplink Shared Channel (USCH) is removed from the list.

Common Channels	Random Access Channel(s) (RACH) Forward Access Channel (FACH) Broadcast Channel (BCH Paging Channel (PCH) Downlink Shared Channel (DSCH) Uplink Shared channel (USCH) High Speed Downlink Shared Channel (HS-DSCH)
Dedicated Channel	Dedicated Channel (DCH)

Table 3.3 - Transport Channels for UTRA-TDD

The mapping between logical channels and transport channels for the UTRA-TDD mode is shown in Figure 3.4 for the uplink direction and in Figure 3.5 for the downlink direction.

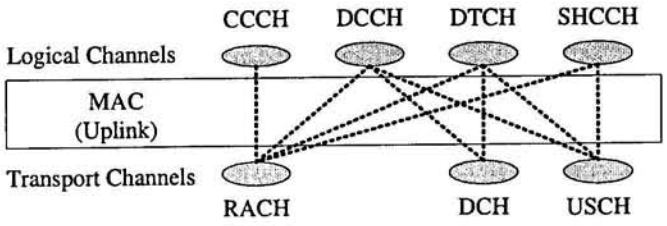

Figure 3.4 - Mapping between logical channels and Transport Channels for UTRA-TDD (uplink).

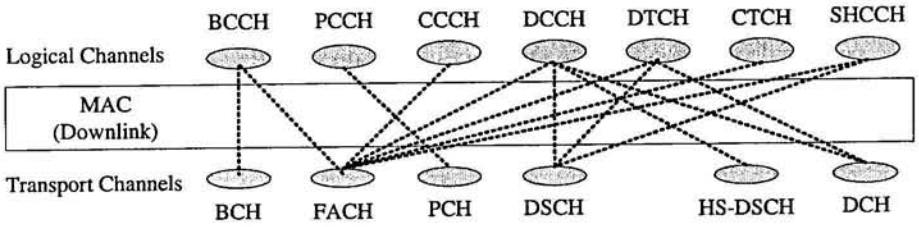

Figure 3.5 - Mapping between logical channels and Transport Channels for UTRA-TDD (downlink)

For UTRA-FDD, there is no Uplink Shared Channel (USCH) and the uplink Common Packet Channel (CPCH) can be connected to both DCCH and CTCH logical channels.

Before describing the physical layer, it is worth analysing how the higher layer PDUs and Service Data Units (SDUs) are segmented and multiplexed into transport blocks to be further treated by the physical layer. According to 3GPP, these data flows can be handled in two modes: transparent and non-transparent. Transparent mode is related to cases where a protocol, MAC or RLC, does not require any protocol control information (e.g. header) [8], whereas non-transparent mode headers are added to PDUs and SDUs. Voice transmission through the RLC and MAC layers is rather transparent and does not require much functionality from these layers [16]. For non-transparent information flow, the higher layer PDUs are passed to the RLC layer, where the SDUs are segmented and concatenated. The RLC header is added and the RLC PDUs are passed to MAC sub-layer. At the MAC sub-layer, header containing routing information or logical channel mapping is added, and the resulting MAC PDU or Transport Block (TB) is passed to the physical layer. In the Physical Layer a Cyclic Redundancy Check (CRC) is attached to each Transport Block (TB) and the packet is passed to further mapping onto physical channels. Figure 3.6 shows an example of data flow from a higher layer to the physical layer.

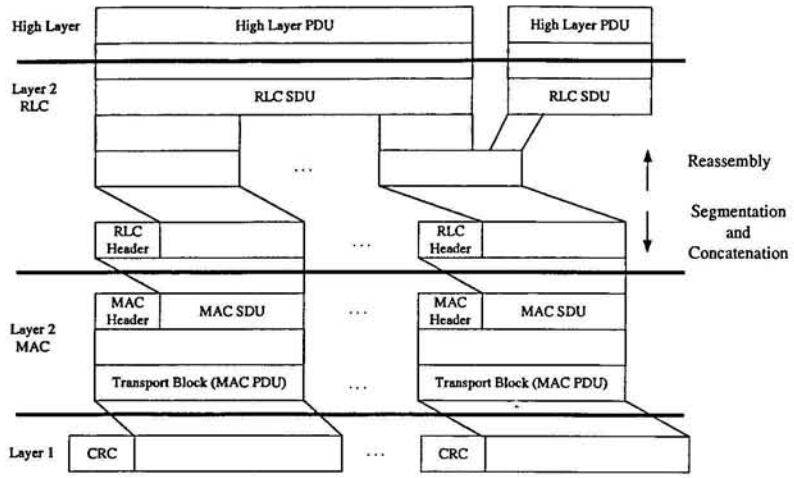

Figure 3.6 - Data flow for non-transparent RLC and MAC.

It is important to point out that, whatever mode is used (UTRA-TDD or UTRA-FDD), for each transport channel, there is an associated Transport Format (TF) or set of transport formats. The transport format describes the physical properties of the transport channel, such as the Transmission Time Interval[12] (TTI), the number of Transport Blocks (TB) per TTI, the number of bits per Transport Blocks (TB), the coding scheme and coding rate, and the modulation scheme. The MAC sub-layer selects the appropriate transport format within an assigned Transport Format Set (TFS) for each active transport channel depending on source rate. The control of Transport Formats ensures efficient use of transport channels [14] and, thus, the radio resources. Due to this feature, the selection of appropriate Transport Format (TF) is one strategy, among many others, used for managing radio resources [17][18].

3.4.3 Layer 1 or Physical Layer

The Physical Layer interacts with the layer above through the use of transport channels via the MAC sub-layer. In the Physical Layer, the transport channels are mapped onto Physical Channels (PhCH), which convert the information into physicals signals for transmission over the radio transmission link. In the opposite direction, the Physical Layer processes the physical signals so that transport services can be offered to higher layers. Table 3.4 shows the physical channels for UTRA-TDD.

For the UTRA-TDD-1.28 option, there is no Physical Node B Synchronisation Channel (PNBSCH) and three new channels are added to the list of physical channels. More detailed description of UTRA-TDD-1.28 option can be obtained from [19]. The mapping between transport channels and physical channels for UTRA-TDD is presented in Figure 3.7

[12] It is defined as an inter-arrival time of TBs and is equal to the periodicity at which TBs are transferred by the physical layer on the radio interface.

Physical Channels
Dedicated Physical Channel (DPCH)
Primary Common Control Physical Channel (P-CCPCH)
Secondary Common Control Physical Channel (S-CCPCH)
Physical Random Access Channel (PRACH)
Physical Uplink Shared Channel (PUSCH)
Physical Downlink Shared Channel (PDSCH)
Paging Indicator Channel (PICH)
Synchronisation Channel (SCH)
Physical Node B Synchronisation Channel (PNBSCH)
High Speed Physical Downlink Shared Channel (HS-PDSCH)
Shared Control Channel for HS-DSCH (HS-SCCH)
Shared Information Channel for HS-DSCH (HS-SICH)

Table 3.4 - Physical Channels (PhCH) for UTRA-TDD

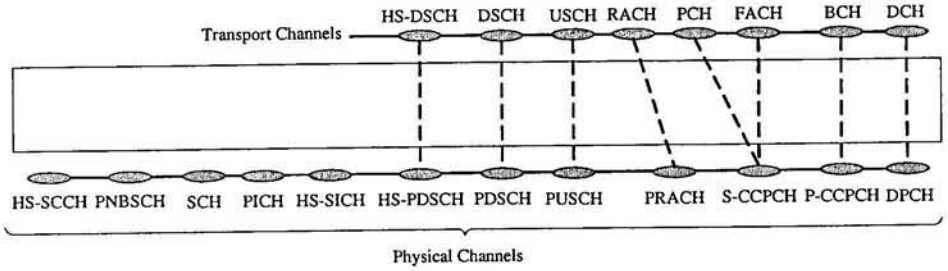

Figure 3.7 - Mapping between transport channels and physical channels for UTRA-TDD

Each association in Figure 3.7 establishes a correspondence between the functions of channels, for example, the dedicated physical channel (DPCH) is mapped to the dedicated transport channel (DCH) for carrying user information in the uplink and downlink directions and vice-versa. Functions related to specific physical layer procedures are attributed to those physical channels where no mapping exist such as: Synchronisation Channel (SCH), which is used for cell search purposes and Paging Indicator Channel (PICH) used for conveying the paging indicator (Figure 3.7).

However, the mapping between the transport channels and physical channels is based on a sequence of operations that should be performed on the traffic channels before the final association to a physical channel and vice versa. The transmission chain for the user plane data from the level of transport channels down to the level of physical channels is shown in Figure 3.8.

The coding and multiplexing steps applied to DCH, RACH, DSCH, USCH, BCH, FACH and PCH transport channels are identified in Figure 3.8 (HS-DSCH transport channel uses a different structure for coding, whose details can be found in [19]). From this structure, it can be seen that after receiving a transport block from higher layers, error detection is provided to the transport block by attaching a Cycle Redundancy Check (CRC) field. The CRC length, which is signalled

from higher layer, can be 24, 16, 12, 8 or 0 bits long, depending on the service requirements. Thereafter, all transport blocks are serially concatenated or segmented to obtain a suitable code block size as defined by the channel coding method. Segmentation will always occur when the size of concatenated transport blocks (with CRCs) exceeds the maximum size of the used code block. The maximum sizes of the code blocks are specified according to the channel coding scheme. UTRA-TDD supports convolutional coding, Turbo coding or no coding schemes and, as a consequence, three maximum code block sizes are defined: 504 bits for Convolutional coding, 5114 bits for Turbo coding and an unlimited size in case of no coding. If, after segmentation, the code blocks had not the size of such blocks, filler bits should be added at the beginning of the first block.

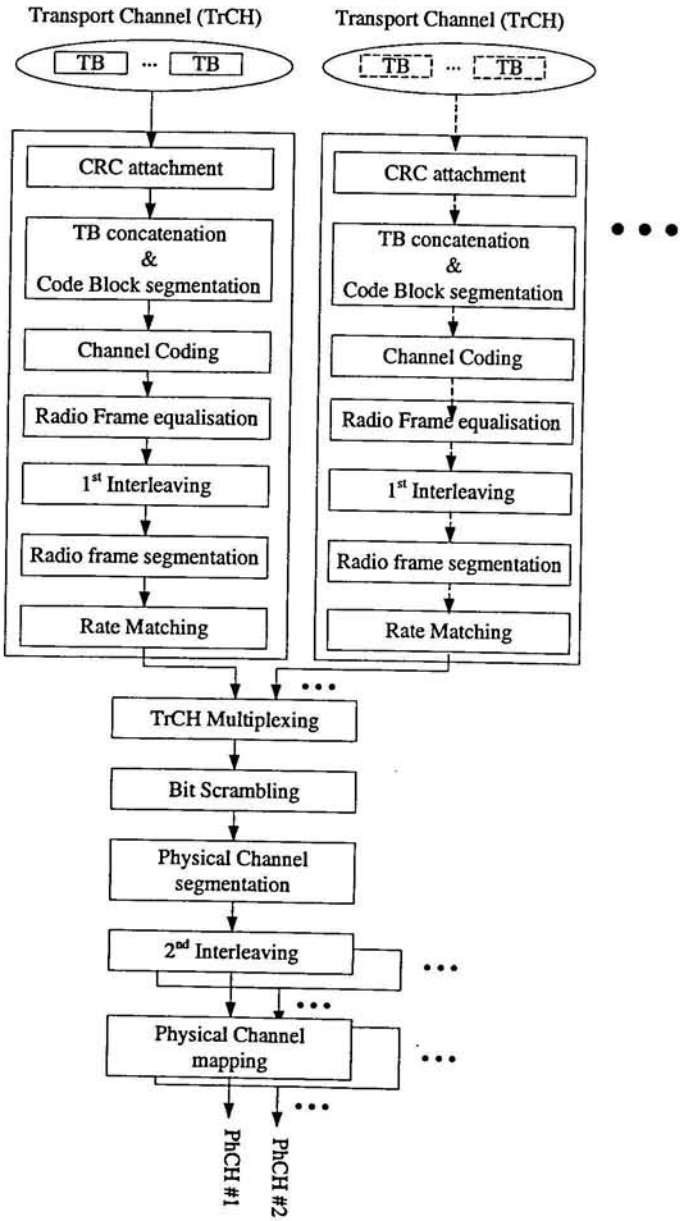

Figure 3.8 – Transport channel multiplexing structure for uplink and downlink

Once the code blocks are built, they are encoded in the Channel Coding block. As mentioned before, three channel coding options are supported by UTRA-TDD: Convolutional coding with code rates of 1/2 and 1/3, Turbo coding with a rate of 1/3 and no coding. Service requirements as determined by Bit Error Rate (BER) and delay considerations determine the type of code to be used. Turbo coding, for example, has been used for high quality data services requiring BER within the range from 10^{-3} to 10^{-6}. ARROWS considered the use of such a coding scheme for encoding of DCH transport channels, thus some features of Turbo coding are described.

Figure 3.9 shows the Turbo encoder specified by 3GPP. The scheme of a Turbo encoder is a Parallel Concatenated Convolutional Code (PCCC) with two 8-state constituent encoders and one Turbo code internal interleaver. The dotted lines shown in the figure are valid during Trellis termination only. Trellis termination guarantees that the encoder is always at state zero at the end of a Turbo block and at the beginning of the next one.

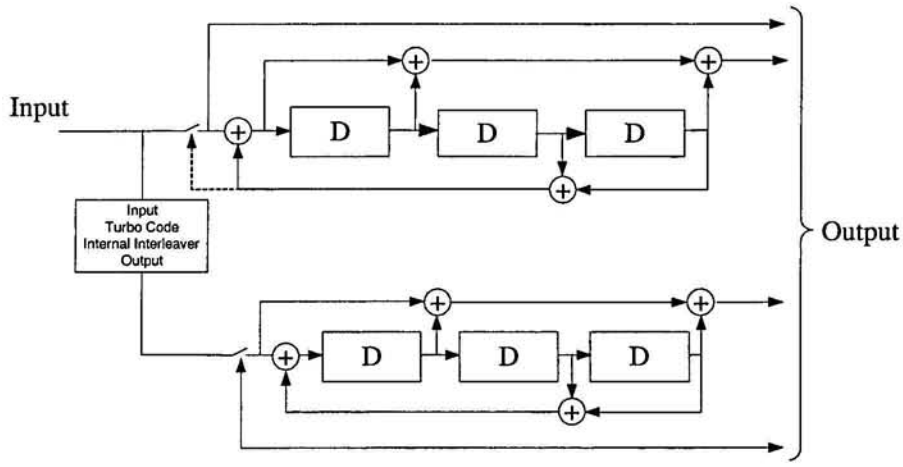

Figure 3.9 - Turbo encoder.

The total number of bits transmitted during trellis termination is 12 and, as consequence, the number of encoded bits (Y_i) on TrCH *i*, for code rate 1/3, is given by:

$$Y_i = 3 \cdot K_i + 12 \tag{3.1}$$

where K_i represents the total number of bits of concatenated TB or the code block size after segmentation. The size of the coding block is important, since the performance of the Turbo code increases as the block size increases. In particular, for high bit rates, it is possible to assemble large blocks in a TTI period, thus ensuring a low BER. Figure 3.10 shows, in terms of BER vs. E_b/N_0, the performance of Turbo coding obtained from [18].

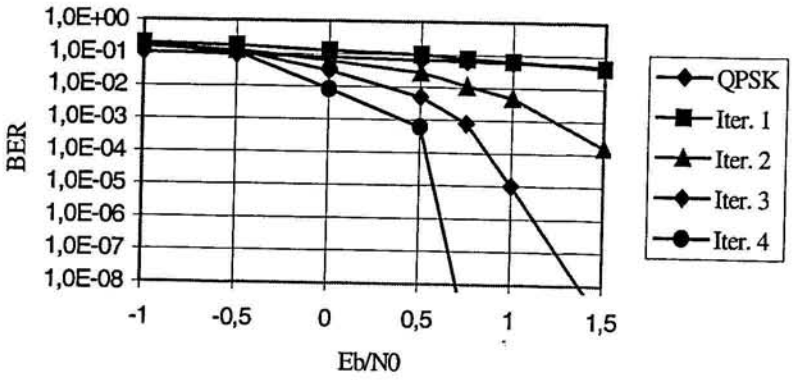

Figure 3.10 - Performance of 3GPP Turbo Coding.

In terms of behaviour of physical layer or link level simulation, the improvement in BER vs. E_b/N_0 provided by Turbo coding is taken into account when calculating the ratio of the number of useful bits to the total number of data bits in a transmission time interval (TTI), that is, the coding efficiency (r). Assuming that puncturing is not used and stuffing is required to perform rate matching to the closest channel bit rate, the number of useful bits is given by the number of service bits in a TB (*TBsize*) multiplied by the number of TBs in a TTI (*NTB*), which is given by the transport format. The total number of bits is the bit capacity of a TTI, which is equal to twice the number of chips per TTI (due to QPSK modulation), divided by the spreading factor (*SF*) and the number of timeslots (TS) per frame ($N_{TS_per_frame}$). Therefore, r is given by:

$$r = TBsize \cdot NTB \cdot \frac{N_{TS_per_frame} \cdot SF}{2 \cdot 3840 \cdot TTI(ms)} \tag{3.2}$$

Considering some intrinsic properties of UTRA-TDD, the overall efficiency of the physical layer[13] may be expressed by $r \cdot (E_b/N_0)$.

In order to ensure that the output blocks of channel coding can be segmented into equal-sized blocks and transmitted over more than one 10ms radio frame, a radio frame equalisation needs to be performed. A Radio Frame Equalisation block (Figure 3.8) performs this task, by padding the necessary number of bits so that data can fit into equal-sized blocks per frame. Subsequently, a first interleaving function is carried out, on each TrCH, in order to randomize errors that occur due to the bursty fading nature of the transmission channel. This kind of fading causes errors to occur in bursts. Interleaving distributes these errors in time and helps the error correction function of the receiver. The first interleaving, or inter-frame interleaving, performs a block interleaving with depths of 10, 20, 40, and 80 ms.

[13] Additionally, the overall efficiency of link layer should include the effect of bits used for channels estimation (midambles) and a guard period.

The encoded bit stream after interleaving is segmented in order to distribute the data over the appropriate number of consecutive frames (1, 2, 4 or 8), which have a 10ms duration in UTRA-TDD. The number of outgoing bits from the radio frame segmentation process should fit the available bit rates of the physical channels so that all frames contain the correct number of bits. To ensure this, rate matching is performed by bit repetition or puncturing. In the TrCH multiplexing stage, the radio frames are serially multiplexed into a Coded Composite Transport Channel (CCTrCH) every 10ms. In case more than one physical channel is required for the transmission of the CCTrCH, physical channel segmentation is performed so that data are distributed among the respective physical channels. Thereafter, a second interleaving is applied to all data bits transmitted during one frame, or separately within each timeslot. The final step in this transmission chain is the mapping of bits from the second interleaver onto physical channels for transmitting over the air interface.

3.4.3.1 Physical Channel and Frame Structure

UTRA TDD uses a combined time division and code division multiple access that adds a TDMA component to CDMA. In the CDMA domain the users are differentiated from each other by code while, in TDMA, timeslots are used to separate different user signals in the time domain. As a consequence, users are characterized by a frequency and code of the CDMA-based domain and a timeslot from the TDMA component. This feature provides to UTRA TDD not only a multicode but also a multislot operation. In this way, the 10ms UTRA-TDD radio frame is subdivided into 15 independent timeslots with duration $2560*T_c$ (T_c is the chip period), and thus the duration of a timeslot is 666μs for a chip rate of 3.84 Mcps. Figure 3.11 shows the UTRA-TDD radio frame format.

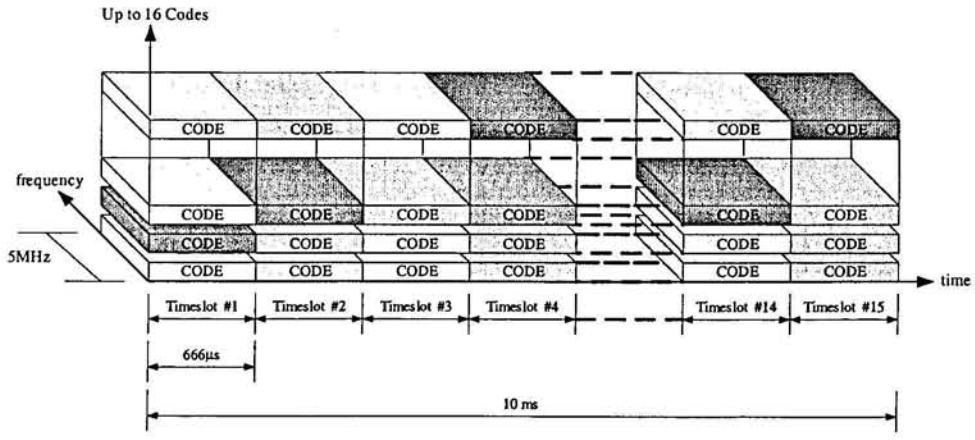

Figure 3.11 – UTRA TDD radio frame format

Any timeslot within a frame can be assigned for uplink (UL) or for downlink (DL) transmission and, as a consequence, different number of timeslots can be allocated to each direction. This

asymmetry between UL and DL timeslots can be exploited for accommodating different uplink and downlink traffic capacity requirements.

This feature is especially important for asymmetrical traffic scenarios (like Internet) where it is expected that downlink traffic is much larger than on the uplink. However, at least one timeslot has to be reserved for downlink transmission to allow for broadcast information and one for uplink transmission in order to allow customer's access to the system [20].

The frontier between an UL and a DL timeslot is called switching point (SP) and, according to 3GPP [19], a frame may contain a single or multiple switching points. Figure 3.12 shows an example of an UTRA-TDD frame with a single switching point.

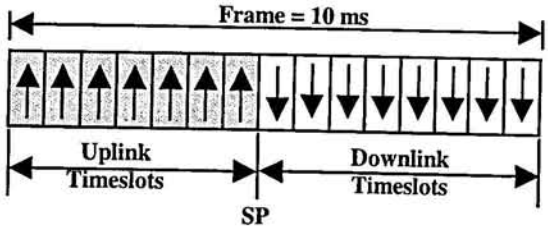

Figure 3.12 - UTRA-TDD frame structure.

A physical channel in UTRA-TDD is a burst, which is transmitted in a particular timeslot within allocated frames, either in a continuous (i.e., in every radio frame) or discontinuous manner. A burst has a duration of one timeslot and consists of two data fields, a midamble and a guard period (GP). Additionally, in the data fields, a burst may contain a Transmitter Power Control bit (TPC), and two fields for Transport Format Combination Indicator (TFCI) bits. The TFCI is a unique feature of UTRA standards and acts as a pointer to a table of all possible combinations of transport formats. The data fields contain the data bits from the transport channels while training sequences, which are used for channel estimation, are transmitted within midambles. The guard period (GP) is used to cope with timing inaccuracies, power ramping, delay spread and, if no timing advance mechanism is used, also with the propagation delay [21]. Figure 3.13 shows a format of generic burst.

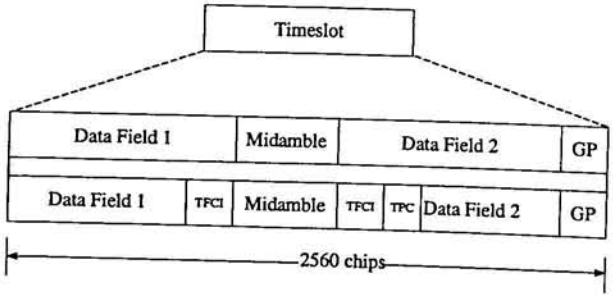

Figure 3.13 - UTRA-TDD burst format.

Three types of burst exist for UTRA-TDD. All of them are used for dedicated physical channels (DPCH), while the other physical channels only use a subset of them. The difference among these burst types is related to the length of each field (data fields, midamble and guard period). Table 3.5 lists the burst types with the length of each field (in chips).

Burst type	Data field 1	Data filed 2	Midamble	Guard period
Burst Type I	976	976	512	96
Burst Type II	1104	1104	256	96
Burst Type III	976	880	512	192

Table 3.5 - Field length for burst types

Except for burst type 3, which is only used for uplink transmission, burst types 1 and 2 can be utilized for uplink and downlink transmission.

The number of data symbol that may be transmitted in the data field in a burst depends on the overall length of both data fields and the number of chips per data symbol (or spreading factor (SF)). This relationship can be expressed as:

$$N = \frac{N_{data_fields}}{SF} \tag{3.3}$$

where N represents the number of data symbols, N_{data_field} is the total length of both data fields in a burst and SF is the spreading factor. Table 3.6 presents the number of data symbols obtained from equation (3.3) for burst types 1, 2 and 3. Once the physical channels are formatted, they are ready for transmission.

Spreading Factor (SF)	Burst Type I	Burst Type II	Burst Type III
1	1952	2208	1856
2	976	1104	928
4	488	552	464
8	244	276	232
16	122	138	116

Table 3.6 - Number of data symbols for burst types 1, 2 and 3

The transmission of the physical channels consists of two processes: spreading and modulation. Figure 3.14 shows a simplified diagram of the spreading and modulation process carried out in the physical channels.

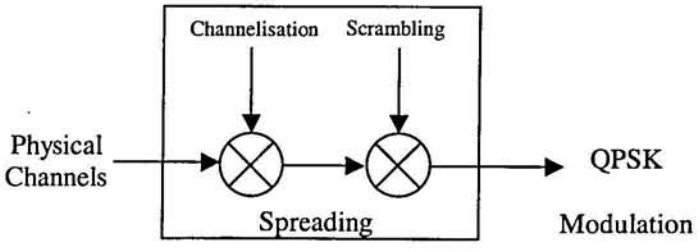

Figure 3.14 - Spreading and modulation

Spreading, in UTRA-TDD, is applied to the data fields of the physical channels (the midamble field is not spread) and is characterized by the channelisation and scrambling operations. The channelisation operation transforms each data symbol into a number of chips, given by the spreading factor, thus increasing the bandwidth of the signal. Orthogonal Variable Spreading Factor (OVSF) codes of length 1,2,4,8 and 16 are used for this operation and can be defined in a tree-like manner, as shown in Figure 3.15.

Each level in the code tree corresponds to a certain spreading factor. A physical channel spread by code c_A is orthogonal to another physical channel spread by code c_B if and only if c_B is not on the path to the root of the tree from c_A or in the sub-tree below c_A. This means that the number of available codes in a timeslot is not fixed but depends on the rate and spreading factor of each physical channel [22].

After channelisation, the resulting spread signal is multiplied by a cell-specific scrambling code of length 16. Downlink physical channels use SF = 16 so as to support high bit rate applications through multicode transmission. Spreading factor of 1 is also possible for operation with a single channelisation code in scenarios with low inter-cell interference. In the uplink, OVSF codes with spreading factor in the range from 16 down to 1 are used for single and multicode transmission.

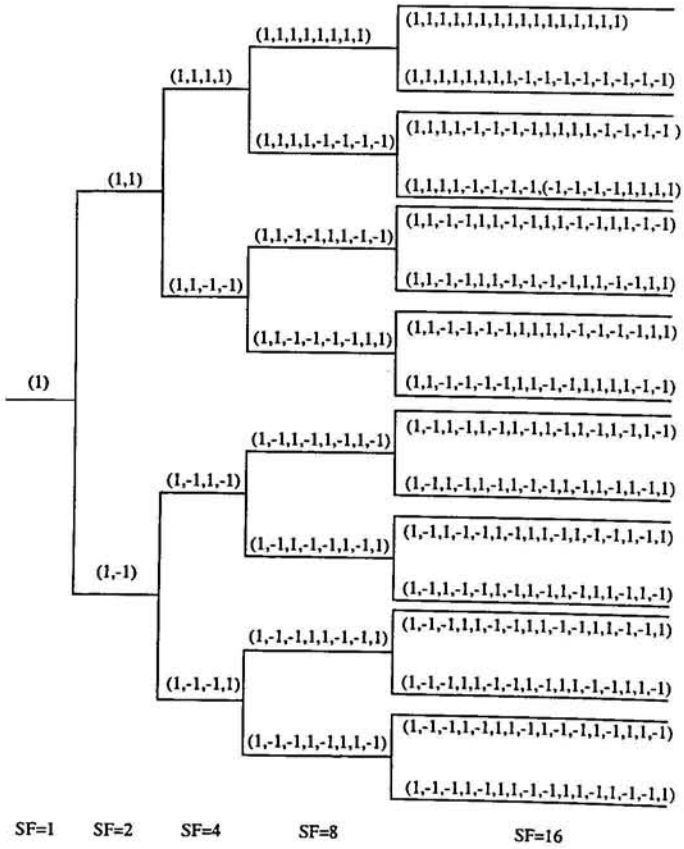

Figure 3.15 - OVSF code tree

After spreading, a QPSK modulation is carried out in the chip sequence generated by the spreading process. Further frequency up conversion is performed before the signal is transmitted over the antenna.

3.4.4 Remarks on UTRA-TDD.

In the early stages of development of IMT-2000 air interface, the main discussions were related to technologies for FDD [23]. However, TDD-based systems have appeared as a desirable mode of operation for mobile communications, since it has special features that can improve the overall system performance [16]. As a TDD-based system, UTRA-TDD embodies such characteristics: the most important ones are cited below.

- Utilisation of unpaired bands

Spectrum allocation is a scarce resource and it has been very expensive in the auction process for deployment of 3G systems. Therefore, the use of unpaired bands is cheaper and allows more efficient use of the spectrum than, for example, FDD-based systems. This is a very attractive feature not only for 3G systems, but also for the next generation of mobile communications.

- Reciprocal channel

Mobile communications channels are characterized by multipath signal arrival and fading. In spite of the various types of fading manifestations, fast fading depends on the frequency. In UTRA-TDD, the same frequency is used for uplink and downlink transmission and, therefore, the estimated fast fading is the same for both directions. This feature facilitates the use of adaptive communications techniques such as open loop power control, transmitter diversity and adaptive antennas. Utilising the channel reciprocity of UTRA-TDD, interference mitigation techniques can be also used in order to reduce the interference in CDMA systems over multipath fading channels. In other words, pre-distorting signals can be transmitted by a Node B in order to improve the orthogonality between the desired signal and interfering signals, thus combating the multipath fading and also reducing the complexity of user equipment's receiver, as well [24][25].

- Multiuser detection

Another point that should be highlighted is related to the Multiple Access Interference (MAI) of CDMA-based systems. MAI refers to the intra-cell interference that is caused by users that are located in the same cell and transmit at the same time and on the same frequency. The most common technique used to minimize this kind of interference is known as Multiuser Detection (MUD) or Joint Detection (JD). Several MUD methods exist and most of them are equally applicable to CDMA-based systems in both FDD and TDD modes. However, these techniques are very processing intensive and most effective methods need processing power that increases exponentially with respect to the number of users being processed [16]. Due to the additional

separation in the time domain, the number of users that are active at the same time in UTRA-TDD is smaller than in, for example, UTRA-FDD and, as a result, joint detection (JD) techniques can be implemented with a reasonable complexity [26].

- Capacity adaptation for asymmetrical traffic environment

As mentioned before, UTRA-TDD radio frame is divided in 15 timeslots. Each timeslot can be independently assigned for either uplink or downlink transmission; thus a different number of timeslots can be allocated to each direction. By selecting an appropriate ratio of timeslots for uplink and downlink transmission [27] or varying the position of the switching point, the UTRA-TDD can be adapted to different and asymmetrical traffic environments, like those that are common on the Internet. This adaptive capacity of UTRA-TDD to different traffic patterns is particularly important since it is expected that Internet and interactive services will became the dominant traffic in mobile communications [28].

- Inter-cell Interference in UTRA-TDD systems

In addition to intra-cell interference mainly characterized by Multiple Access Interference (MAI), UTRA-TDD systems should take into account another type of interference called inter-cell interference.

Considering a certain cell of interest, inter-cell interference can be defined as interference produced by all signals that reach the cell of interest from others cells.

Although there are four types of inter-cell interference, they do not occur simultaneously. In order to discover which type of inter-cell interference takes place, it is enough to identify the transmitter entities (UEs and/or Node Bs) in the other cells different from the cell of interest and the receiver in the cell of interest (UE and/or Node B). A detailed analysis of all types of inter-cell interference is carried out in chapter 4 and, as an example, only two types of inter-cell interference, which are UTRA-TDD-specific, are described here.

Particularly, due to the specific capacity of UTRA-TDD systems of adapting to different traffic patterns, timeslots may be allocated in opposite directions in adjacent cells. In such crossed timeslots, two types of inter-cell interference arise between users' equipment and between Node Bs.

As an example, let us assume, without loss of generality, the two cells scenario with two users located at the cell border, as shown in Figure 3.16.

On a crossed timeslot, two different entities are transmitting; UE_1 in cell 1 and Node B in cell 2. In this way, UE_2 receives signals from Node B as well as inter-cell interference from the entities that are transmitting in others cells, that is, from UE_1 of cell 1. This type of interference that occurs between users is referred to as User Equipment-to-User Equipment interference ($I_{UE \leftrightarrow UE}$). Similarly,

in cell 1, Node B receives the desired signals from UE_1 and the undesired ones from Node B in cell 2, characterizing the inter-cell interference of type Node B-to-Node B ($I_{Node\ B \leftrightarrow Node\ B}$). Figure 3.16 presents these two types of inter-cell interference intrinsic to UTRA-TDD.

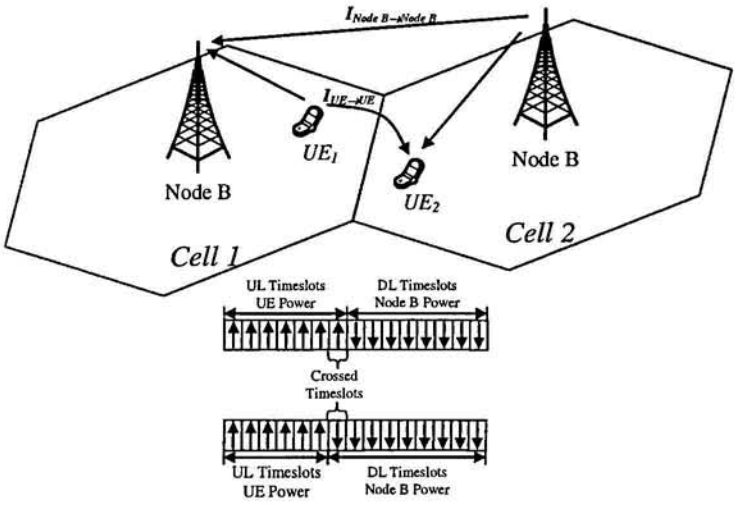

Figure 3.16 - Inter-cell interference in crossed slots.

It is important to mention that these two types of inter-cell interference can seriously damage the performance of transmission into crossed timeslots and, thus, limit the flexibility claimed by UTRA-TDD to handle asymmetrical traffic. Therefore, the benefits of using crossed timeslots strongly depend in how interference patterns are managed. Intelligent Dynamic Channel Allocation (DCA) algorithms play an important role in fulfilling this goal.

Chapter 4 is aimed at describing these intelligent DCA algorithms and to show how the DCA strategy developed in this thesis is used for combating intra-cell interference present in UTRA-TDD-like systems.

3.5 Concluding Remarks

A detailed description of UTRA-TDD air interface of 3G UMTS was carried out in this chapter. To carry out this task, this chapter analysed the overall architecture of UMTS, highlighted the services that are envisaged for such a system and identified the main differenced between UTRA-TDD and UTRA-FDD.

As far as UTRA-TDD is concerned, this chapter pointed out that UTRA-TDD is particularly suitable for asymmetrical traffic environments since it adds a TDMA component to CDMA. In the CDMA domain the users are differentiated from each other by code while, in TDMA, independent timeslots are used for either downlink or uplink transmissions, as well as to separate different user signals in the time domain.

By using the concepts described in chapter 2, this chapter also showed how the services are processed by UTRA-TDD physical channels. All signal processing steps were described with special emphasis on the encoding process. In this stage, some results obtained in the ARROWS project were presented in order to prove the effectiveness of Turbo coding in ensuring low bit rates (BER) for high quality data services. Additionally, an expression for calculating the efficiency of this encoding process was deduced, which can be used for characterizing the overall performance of the physical layer.

Special characteristics of the UTRA-TDD air interface were discussed in the last part of this chapter where two types of UTRA-TDD interference that appear in crossed timeslots were highlighted. Finally, this chapter suggests methods for combating these kinds of interferences.

3.6 Chapter References

[1] 3GPP TS 23.107 v6.0.0 (2003-12) – "Quality of Service (QoS) Concept and Architecture".

[2] H. Holma and, A. Toskala, "WCDMA for UMTS: Radio Access for Third Generation Mobile Communications", 2nd Edition, *John Wiley & Sons, Ltd.*, ISBN 0-470-84467-1, p.391, 2002.

[3] S.Dixit, Y. Guo and Z. Antoniou, "Resource Management and Quality of Service in Third-Generation Wireless Networks", *IEEE Communications Magazine*, Vol.39, No.2, pp.125-133, February 2001.

[4] 3GPP TS 21.905 - Vocabulary for 3GPP Specifications

[5] 3GPP TS 25.401 - UTRAN overall description

[6] 3GPP TR 25.922 - Radio Resource Management Strategies

[7] 3GPP TS 25.201 - Physical layer - general description

[8] 3GPP TS 25.301 - Radio Interface Protocol Architecture

[9] C. Geβner, R. Köhn, J. Schniedenharn and, A. Sitte, "Layer 2 and Layer 3 UTRA-TDD", *Proceedings of the 51st Vehicular Technology Conference – VTC'00 - Spring*, Vol.2, pp. 1181-1185, 2000.

[10] 3GPP TS 25.331 - Radio Resource Control (RRC) Protocol Specification.

[11] 3GPP TS 25.324, v5.3.0 (2003-03) – Broadcast/Multicast control (BMC) protocol.

[12] 3GPP TS 25.323, v5.2.0 (2002-09) – Packet Data Convergence Protocol (PDCP).

[13] 3GPP TS 25.322, v5.2.0 (2002-09) – Radio Link Control (RLC) Protocol.

[14] 3GPP TS 25.321, v5.6.0 (2003-09) – Medium Access Control (MAC) Protocol.

[15] 3GPP TS 25.302 V6.0.0 (2003-12) - Services Provided by the Physical Layer.

[16] R. Esmailzadeh, M. Nakagawa, "TD-CDMA for wireless communications", Artech House, Inc., ISBN 1-58053-371-X, p.176, 2003.

[17] S. Heier and M. Malkowski, "UMTS Radio Resource Management by Transport Format assignment and selection", *Proceedings of The 5th International Symposium on Wireless Personal Multimedia Communications – WPMC'02*, Honolulu, USA, October 2002.

[18] ARROWS D17 Deliverable, "Final Report on the evaluation of RRM Algorithms by simulations", November 2002. (available in www.arrows-ist.upc.es)

[19] 3GPP TS 25.221, v5.5.0 (2003-06) - Physical Channels and Mapping of Transport Channels onto Physical Channels (TDD).

[20] I. Forkel, X. Jin, "Performance Comparison Between UTRA-TDD High Chip Rate and Low Chip Rate Operation", *Proceedings of IEEE Personal, Indoor, Mobile Radio Communications Conference – PIMRC 2002*, pp. 2102-2106, Lisbon, Portugal, 2002.

[21] M. Haardt, A. Klein, R. Koehn, S. Oestriech, M. Purat, V. Sommer and T. Ulrich, "The TD-CDMA Based UTRA TDD Mode", *IEEE Journal on Selected Areas in Communications*, Vol.18, No.8, pp.1375-1385, August 2000.

[22] 3GPP TS 25.223, v6.6.0 (2003-12) – Spreading and Modulation (TDD).

[23] T. Ojanperä, R. Prasad, "An Overview of Air Interface Multiple Access for IMT-2000/UMTS", *IEEE Communications Magazine*, pp.82-95, September 1998.

[24] M. M. Silva, A.M.C. Correia, "Interference Suppression using Pre-distortion Filtering and Selective Transmit Diversity", Proceedings of the 4th Conference on Telecommunications-ConfTele'03, June, Aveiro, Portugal, 2003.

[25] J. Choi, "Interference Mitigation using Transmitter Filters in CDMA Systems", IEEE Transaction on Vehicular Technology, Vol. 51, N° 4, pp.939-946, July 2002.

[26] M. Volmer, M. Haardt and, J. Götze, "Comparative Study of Joint-Detection Techniques for TD-CDMA based Mobile Radio Systems", *IEEE Journal on Selected Areas in Communications*, Vol. 19, No. 8, pp. 1461- 1475, August 2001.

[27] D. G. Jeong, and W. S. Jeon, "CDMA/TDD System for Wireless Multimedia Services with Traffic Unbalance Between Uplink and Downlink", *IEEE Journal on Selected Areas in Communications*, Vol. 17, N° 5, pp.939-946, May 1999.

[28] R. Esmailzadeh, M. Nakagawa, A. Jones, "TDD-CDMA for the 4th Generation of Wireless Communications", *IEEE Wireless Communications*, pp.8-15, August 2003.

4
Dynamic Channel Allocation in 3G UMTS systems

4.1 Introduction

During the experimental stage of wireless telegraphy, the sceptical feared that it might never attain a full usefulness because of certain imperfections. The electrical impulses sent forth by a powerful station would shatter those of a feebler rival. The question was whether such *interference* could be rendered impossible. Moreover, another question was: could more than one message be taken at the same time? [1]. Although in the same article "the immunity from *interference* was promised for the near future", capacity and interference mitigation issues had already represented one of the major challenges in such wireless communications systems.

Even though the scenario in modern 3G mobile communications systems is quite different from the ancient wireless systems, the concerns about system capacity and interference mitigation remain [2]. Additionally, the demand for high bit rate multimedia services with different QoS requirements envisaged for 3G systems increases the system complexity and, as a consequence, requires efficient use of radio resources [3]-[5].

In 3G UMTS systems, the available radio resources are managed by a set of mechanisms known as Radio Resource Management (RRM) algorithms. These mechanisms deal with functions related to the system access control, mobility of users equipment and assignment and control of radio resources [5]-[7]. Although there is a strong interaction among these mechanisms, they can be described according to their main functions, namely: Admission Control (AC), Load Control (LC), Packet Scheduling (PS), Handover Control (HC), Power Control (PC) and Dynamic Resource Allocation (DRA), which is further split into Code Allocation and Dynamic Channel Allocation.

This thesis is about the development of a DCA algorithm and therefore this will be discussed in detail in this chapter. Dynamic channel allocation mechanisms are specific of UTRA-TDD systems and are considered a fundamental element of resource allocation in such systems. With this status, the DCA algorithms are tightly coupled with all RRM mechanisms and, for that reason, a brief description of RRM algorithms will be given in the following section.

4.2 RRM Algorithms in UMTS systems

In 3G UMTS systems, the Radio Resource Management (RRM) algorithms are responsible for efficient utilization of the air interfaces resources. They are needed to guarantee Quality of Service

(QoS), to maintain the planned coverage area, and to offer high capacity [8]. Each algorithm has a specific function and provides useful information for the others. As a consequence of these interactions, the performance of a given algorithm affects the performance of others algorithms. As far as functions carried out by these mechanisms are concerned, they can be divided in the following algorithms:

- Admission control (AC)

  The purpose of admission control is to accept or reject new users, new radio bearers or new radio links. The admission control should try to avoid overload situations and can be performed in different ways [9]. Admission control can be performed according to the type of required QoS and service as well as to the current system load. In general, the decisions made by the Admission Control algorithms are based on interference and resource measurements [10][11]. In the interference-based admission control strategies, a new call is admitted into the system if the new resulting total interference level is lower than a threshold value [8]. Different admission control strategies can be implemented but, directly or indirectly, these algorithms use the basic idea of checking the interference that would result into the system provided that the call was accepted. Admission control is required in both uplink and downlink transmission, since the UMTS systems are capable of serving different services, which demand different capacities as well as different qualities [11].

- Load control (LC)

  The function of Load Control or Congestion Control (CC) is to control, detect and handle situations when the system is reaching a near overload or an overload situation with the already connected users [7]. The Load Control functionality should return the system back to a target load, which is defined by radio network planning [8]. Several steps are taken by the Load Control algorithms in order to remove the congestion of the system. Among these, there are actions for controlling the interference into the system, lowering the bit rate of one or several services that are more insensitive to increased delays, performing handovers and, the most drastic one, removing one or several connections [8][11]. The Load Control procedures are activated when a threshold (congestion threshold) is exceeded, which corresponds to a certain load for uplink and downlink transmissions.

- Packet Scheduling (PS)

  Real time and non real time services are envisaged for UMTS and, according to chapter 3, the main distinguishing factor among all UMTS QoS classes is how delay-sensitive the respective traffic is. As far as packet-oriented services are concerned, the packet scheduling algorithms may use such a feature to control the allocation of resources to packets in order to maximize the system throughput and maintain the QoS requirements. Several works that consider the use of

packet scheduling strategies in 3G environments have been reported in the literature [12][13]. The basic idea of these strategies is to delay[14] some packets until the resource is available. As an illustrative example, let us assume a scenario characterized by non real time services (NRT) with different bit rates. If the sum of all data of different users, belonging to the same cell and transmitting at same time, exceeds the available resources, a packet scheduler can divide the available resources and, based on a given criteria, can schedule packets to use the resources over different periods of time [14]. Real time (RT) services can also take benefit from the use of packet scheduler algorithms. Managing the resources available for NRT services, it is possible to accept more real time traffic without rejecting NRT services [15].

- Handover control (HC)

  In modern mobile communications systems, handover can be interpreted as the process of transferring the user equipment from one channel to another, which can result in a cell change or not. In 3G UMTS systems, handover control algorithms are in charge of such a process. There are various types of handovers, which can be categorized as hard handover and soft/softer handover. In hard handover, the radio link (channel) previously assigned to a given user is removed before the new channel is established. On the other hand, in soft handover, the user is connected to two or more radio links simultaneously on the same frequency [11]. Soft handover is performed by means of macro diversity, which refers to the possibility of combining replicas of the same signal in order to optimise the signal reception. Softer handover corresponds to a special case of soft handover where the radio links belong to the same base station. Inter- and intra-systems handover are supported in UMTS and radio measurements such as traffic volumes, quality and signals measurements for uplink and downlink and user positioning can be used as inputs for handover algorithms [10]. UTRA-FDD systems support soft/softer and hard handovers while UTRA-TDD only supports hard handovers.

- Power control (PC)

  In modern mobile communications systems, interference caused by other users' equipment as well as other base stations constitute a source of noise that may be dominant when compared to background and man-made noise. For this reason, these systems are limited by the amount of total interference present rather than the background noise [16]. The proper use of power control techniques not only can minimise the effects of co-channel interference but also can maintain the link quality in both uplink and downlink transmission, maximise the battery life of user equipment, protect the signals against fading and, for CDMA-based systems, can combat the near-far problem [17][18]. Additionally, the reduction of interference can be traded for capacity, allowing more users to access the system [19]. Power control is implemented in both

[14] As a distinguishing factor among UMTS QoS services, the delay should be maintained in accordance with QoS requirements of the services.

base stations and users' equipment in a centralized or decentralized way. Centralized power control schemes require some sort of central controller, which adjust the power levels based on knowledge about all radio links in the system. In the decentralized or distributed power control schemes, the adjustment is based only on local information [20][21]. The information used by the power control algorithms can be the strength of signal arriving at base station from user equipment [18], the signal to interference ratio (SIR) [20][21] and the bit error ratio (BER) [22]. Additionally, power control techniques can be classified as closed-loop, open-loop or a combination of both.

In UMTS, open loop power control is the ability of a UE transmitter to adjust its power based on measurements made on signals received from the base station [23][24]. This method is most effective if the uplink and downlink channels are reciprocal as in UTRA-TDD. Closed-loop power control relies on feedback information from the opposite end of the communication link. Moreover, closed-loop power control can be divided into two parallel processes: outer-loop power control and inner-loop power control[15]. Outer-loop power control sets the target quality value for inner-loop power control, which adjusts the power of UE or base station (BS) in order to achieve the target value set by outer-loop power control. The controls are carried out by means of Transmitted Power Control (TPC) commands that increase or decrease the transmitted power of base stations or users' equipment. Open-loop power control is only used in UTRA-TDD systems and for initial power setting in UTRA-FDD systems. Closed-loop power control is used in UTRA-FDD systems and in the downlink of UTRA-TDD systems to compensate for the fading of channel after the initial power level has been set [19].

- Dynamic Resource Allocation

  Resource allocation is concerned with the allocation of radio resource units. Different Resource Units (RUs) are defined for each mode of UMTS and, as a result, dynamic resource allocation is different for UTRA-FDD and UTRA-TDD systems.

  In UTRA-FDD systems, the basic Resource Unit (RU) is characterized by a combination of one frequency (carrier frequency) and one spreading code. Considering that in 3G UMTS systems the cluster size is equal to one cell, the basic RU for UTRA-FDD is mainly characterized by its spreading code. In UMTS systems, the spreading is performed by the channelisation codes, which use Orthogonal Variable Spreading Factor (OVSF) codes. Code allocation deals with the problem of how different codes are allocated to different connections [10]. The code allocation problem is only related to downlink, because in this transmission direction all users share the same code tree, while in the uplink each user can use all codes [9]. The main drawbacks of OVSF are the limited number of available codes in downlink and the maintenance of

[15] Inner loop power control is also referred to as fast closed-loop power control.

orthogonality among these [25]. However, the maintenance of orthogonality among the assigned OVSF codes may cause the code blocking[16] problem [26] and, in order to prevent such a problem, methods to allocate/deallocate the channelisation codes in the downlink have been reported in the literature. The common feature of these algorithms is the aim of increasing system capacity by minimizing code tree fragmentation and/or propose methods for reconstruction of the tree structure of OVSF codes[25]-[29].

In UTRA-TDD systems, the basic Resource Unit (RU) is characterized by a combination of one frequency (carrier frequency), one timeslot, and one spreading code. Recalling that in 3G UMTS systems the cluster size is equal to one cell, the basic RU of UTRA-TDD systems is mainly characterized by one code and one timeslot[17] [30]. One bearer service may require the allocation of a single or multiple RUs. Multirate services are achieved by pooling of RUs, which may be based on assigning multiple codes within one timeslot (multicode operation), multiple timeslots within one frame (multislot operation) or both. The allocation of RUs to cells is the responsibility of slow DCA, while fast DCA allocates resources to bearer services, according to a cell-related preference list updated by slow DCA [25]. The slow DCA can be terminated at a network element above the base stations that form the seamless coverage area, which, in practice, corresponds to RNC. Fast DCA is always terminated at the base station [8]. The DCA is supported by periodic reporting and monitoring performed by both the user equipment and the base station.

Real Time (RT) and Non Real Time (NRT) services have different treatments by channel allocation strategies. In case of RT services, channels remain allocated for the whole duration the bearer service is established. The allocated resources may change as a result of a channel reallocation procedure. Channel reallocation procedures can be triggered for many reasons. For instance, a reallocation can occur to cope with varying interference conditions. Another case for reallocation occurs when, using high rate RT services (i.e. services requiring multiple resource units), a channel reshuffling procedure is required to prevent a fragmentation of the allocated codes over to many timeslots. This is achieved by freeing the least loaded timeslots (timeslots with minimum used codes). Finally, when using smart antennas, channel reallocation is useful to keep the different users spatially separated in the same timeslot. In case of NRT services, channels are allocated only for the period of the transmission of a data packet by using best effort strategy, i.e., resources available for NRT services are distributed to all admitted NRT services with pending transmission requests. The number of channels allocated for any NRT

[16] Code Blocking is the problem that a high-rate request cannot be supported because all supported codes for this rate are not orthogonal to the assigned codes, even though the system still has enough capacity to provide the high-rate request.

[17] If there is more than one carrier available for a single operator, other frequency reuse clusters are possible (>1).

service is variable and depends at least on the number of current available resources and the number of NRT services attempting for packet transmission simultaneously. Additionally, prioritisation of admitted NRT services is possible [25].

All RRM algorithms described above are designed for maximizing system capacity and combating/avoiding the harmful effects of interference.

As far as the DCA mechanism is concerned, the channel assignment process is related to two major aspects. First, the way in which the RUs are packed into timeslots, that is, the global pattern of occupation of timeslots, independently of the actual mapping of RUs to specific users' equipment. The second issue deals with criteria to allocate specific RUs to users' equipment, given the overall pattern of timeslot occupation (packing) and how each users' equipment is differently affected by (or contributes to) interference, due for example to its position in the cell, required resources or target QoS.

Additionally, typical asymmetrical UTRA-TDD environments are characterized by a complex interference scenario and possible DCA strategies must take into account interference (in particular co-channel interference) as well as flexibility for the allocation process itself and the fact that traffic asymmetry patterns are likely to be quite different in neighbouring cells. Thus, the dynamic channel problem is to find a channel assignment within a cell that avoids/limits co-channel interference, maintains the link quality and maximizes the system capacity [4][30]-[32].

In the following sections, the above aspects will be analysed, as well as possible strategies will be presentedd. However, it is import to first characterise the interference scenario of UTRA-TDD systems.

4.3 Interference scenario of UTRA-TDD systems

The interference scenario of UTRA-TDD systems is complex. Many factors and situations can cause interference. Interference can arise in scenarios with multiple UTRA-TDD operators as well as in the ones involving the co-existence of both modes of UMTS [8]. However, co-channel interference (inter-cell interference due to all possible sources of interference (signals) from other cells different from a given cell of interest) represents one of the main factors that affect the performance of UTRA-TDD systems. Inter-cell interference can be combated by applying intelligent dynamic allocation mechanisms [2]-[4][25][32] and corresponds to the scenario that will be described in this section.

As mentioned in chapter 3, the flexible frame structure of UTRA-TDD systems allows each timeslot to be independently assigned for either uplink or downlink transmission; thus, a different number of timeslots can be allocated to each direction. By selecting an appropriate ratio of

timeslots for uplink and downlink transmission [33] or varying the position of the switching point [34], these systems can be adapted to different and asymmetrical traffic environments.

In a multiple cell environment, it was also shown that, due to the capacity of adapting to different traffic patterns, timeslots might be allocated in opposite directions in adjacent cells. In these timeslots, which are known as crossed timeslots [35], two types of inter-cell interference (co-channel interference) arise between users' equipment and between Node Bs. These two types of interference can seriously affect the performance of transmission in the crossed timeslots and, therefore, the benefits of using crossed timeslots strongly depend on how interference patterns are managed.

In order to characterize the inter-cell interference scenario in UTRA-TDD systems, let us consider, without loss of generality, a two-cell scenario such as presented in chapter 3 and reproduced in Figure 4.1 for convenience. For simplification of nomenclature, hereafter Node B will be referred to as Base Station (BS).

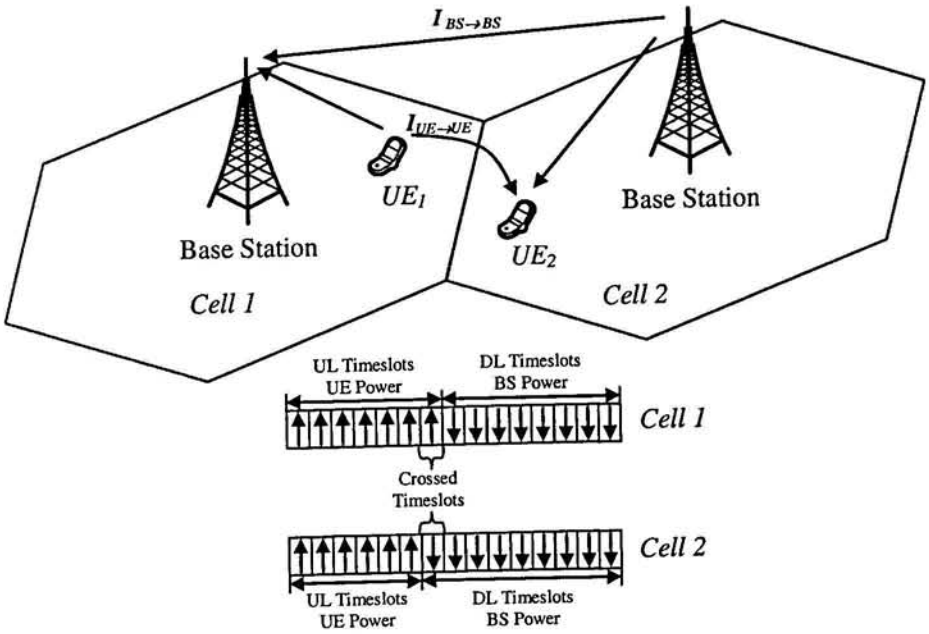

Figure 4.1 – Inter-cell interference scenario for UTRA-TDD systems

The signal to interference ratio (SIR) is the limiting factor for a mobile communications system rather than the signal to noise ratio (SNR) [16] and, for that reason, this parameter will be considered in the present analysis.

Assuming a single operator scenario, the signal to interference ratio (SIR) in the uplink (UL) direction can be expressed as [36]:

$$SIR_{UL} = \frac{SF \cdot P_r}{(1-\beta) \cdot I_{OWN} + I_{OTHER} + N_0} \tag{4.1}$$

and in the downlink (DL) direction as:

$$SIR_{DL} = \frac{SF \cdot P_r}{\alpha \cdot I_{OWN} + I_{OTHER} + N_0} \tag{4.2}$$

where P_r is the received signal, SF represents the spreading factor, I_{OWN} is the intra-cell interference, I_{OTHER} is the inter-cell interference, N_0 is the background noise, β is an interference reduction factor due to the use of, for example, Multi User Detection (MUD) in UL and α is the orthogonality factor that takes into account the fact that the DL signals are not perfectly orthogonal due to multipath propagation.

According to equations (4.1) and (4.2), I_{OWN}, I_{OTHER} and N_0 are the spurious signals that should be controlled within a feasible range. N_o is always present in physical systems; I_{OWN} is the interference due to the users' equipment that communicate in the same cell, at the same time (same timeslot).

I_{OWN} represents the intra-cell interference and is characterized by Multiple Access Interference (MAI). According to section 2.2.2.2 and section 3.4.4, special features of UTRA-TDD systems provide, in theory, that MAI can be eliminated by using multiuser detection techniques (MUDs) [37]. Additionally, it was also shown that in downlink transmission a good orthogonality of code sequences could be achieved by using the Walsh-Hadarmard codes. For the purpose of this analysis, we assume the use of ideal MUDs and orthogonal codes in downlink transmission so that the intra-cell interference is neglected and, as a consequence, equations (4.1) and (4.2) can be rewritten as [38]:

$$SIR_{UL/DL} = \frac{SF \cdot P_r}{I_{OTHER} + N_0} \tag{4.3}$$

Inter-cell interference (I_{OTHER}) is due to all possible sources of interference (signals) from other cells. The basic rule to determine this interference is to consider that interference is from a transmitter to a receiver. The receiver is in the target cell whereas the transmitter is in other cell(s) different from the target cell. Mathematically, this rule can be expressed as:

$$I_{OTHER} = \sum_{Tx} I_{Tx \rightarrow Rx} \tag{4.4}$$

Applying equation (4.4) to a typical mobile communications scenario such as represented by Figure 4.1, I_{OTHER} can be represented by:

$$I_{OTHER} = \sum_{UE} I_{UE \rightarrow i} + \sum_{BS} I_{BS \rightarrow i} \tag{4.5}$$

where 'i' corresponds to a receiver in the cell of interest or target cell; it can be a user equipment (UE) or a base station (BS). In equation (4.5), $\sum_{UE} I_{UE \to i}$ represents all signals from users' equipment (in other cells) that reach the receiver 'i' in the target cell at the same time that 'i' is receiving and, $\sum_{BS} I_{BS \to i}$ corresponds to all signals from base stations (in other cells) that reach the receiver 'i' in the target cell at the same time that 'i' is receiving. Thus, according to equation (4.5), the types of inter-cell interference are [39]:

- $I_{UE \to BS}$ → user equipment to base station interference;
- $I_{BS \to UE}$ → base station to user equipment interference;
- $I_{UE \to UE}$ → user equipment to user equipment interference;
- $I_{BS \to BS}$ → base station to base station interference.

All these types of interference exist, but not at the same time and, in order to discover which interference takes place, let us consider Figure 4.2 that shows the traffic patterns (in terms of number of timeslots allocated for uplink and downlink direction in the frames) for the scenario presented in Figure 4.1.

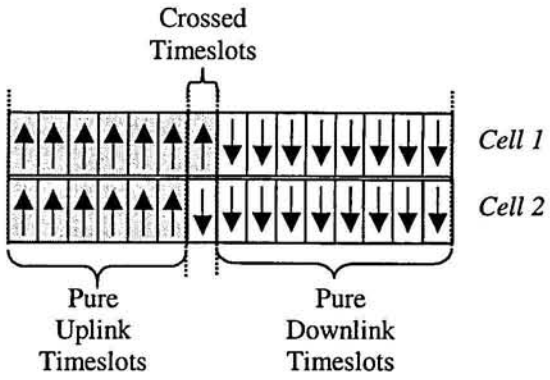

Figure 4.2 - Frames for the scenario presented in Figure 4.1

As can be seen in Figure 4.2, there are different and asymmetrical traffic patterns between cell 1 and cell 2 and, as a result, two types of timeslots can be identified: pure and crossed timeslots [40].

Pure timeslots are defined as the timeslots that are allocated in only one direction in adjacent cells. This means that there are only UEs or BSs transmitting simultaneously in the adjacent cells. Pure timeslots can be defined for both uplink and downlink transmission. In pure uplink timeslots only the users' equipment are transmitting whereas in pure downlink timeslots only the base stations are transmitting. Therefore, the types of interference that arise in such timeslots are: user equipment to base station interference $I_{UE \to BS}$ in the case of pure uplink timeslots and, base station to user equipment interference $I_{BS \to UE}$ for the downlink case. Figure 4.3 shows the interference scenario in pure uplink and downlink timeslots, assuming omnidirectional antennas at base station and users' equipment.

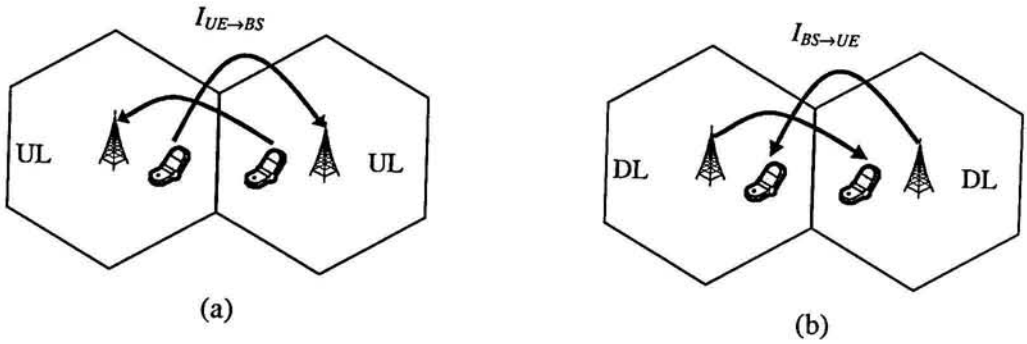

Figure 4.3 - Interference scenario in pure timeslots.
(a) pure uplink timeslots; (b) pure downlink timeslots.

Crossed timeslots are defined as the timeslots that are allocated in opposite directions in adjacent cells. As a consequence, there are UEs and BSs transmitting simultaneously in neighbouring cells. Crossed timeslots can be classified as uplink crossed timeslots and downlink crossed timeslots.

Uplink crossed timeslots appear when in a given target cell the crossed timeslot is allocated for uplink transmission. The interference in this cell is received by the base station and is due to transmission of base stations in other cells so that base station to base station interference ($I_{BS\rightarrow BS}$) is generated. This kind of interference is especially critical when a line of sight condition exists between base stations, although it may be controlled by careful network planning [39].

Downlink crossed timeslots occur when the target cell has a crossed timeslot in the downlink direction. In this case, the interference is received by UEs and is due to transmission of UEs in the other cells. The result is an interference of type user equipment to user equipment interference ($I_{UE\rightarrow UE}$). In such crossed timeslots, the users operating in the uplink can seriously interfere with other users in the downlink, especially if they are close to each other, near their cell borders. This type of interference is statistical, since it depends on user location and mobility [25]. Figure 4.4 exemplifies the interference scenarios that arise in the crossed timeslots.

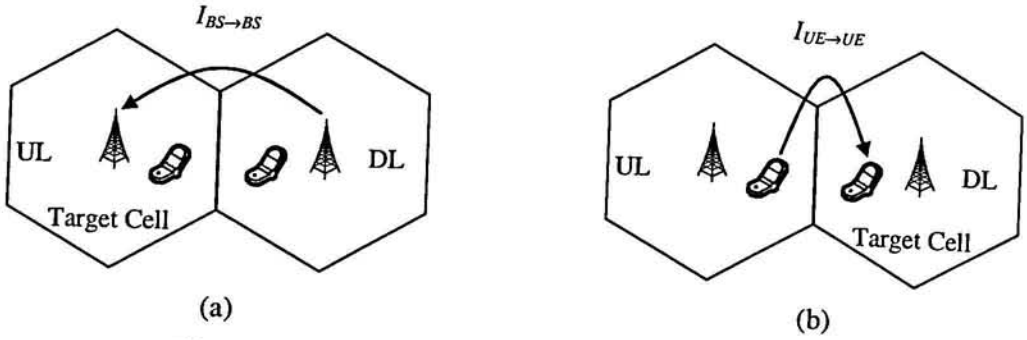

Figure 4.4 - Interference scenario in the crossed timeslots.
(a) uplink crossed timeslots; (b) downlink crossed timeslots

Generalizing the previous analysis for a multi-cell environment, all sources of inter-cell interference from all neighbouring cells of the target cell should be taken into account; therefore, inter-cell interference can be expressed as:

- $I_{OTHER} = \sum_{UE} I_{UE \rightarrow BS_i}$ for pure UL timeslots;
- $I_{OTHER} = \sum_{BS} I_{BS \rightarrow UE_i}$ for pure DL timeslots;
- $I_{OTHER} = \sum_{BS} I_{BS \rightarrow BS_i}$ for uplink crossed timeslots;
- $I_{OTHER} = \sum_{UE} I_{UE \rightarrow UE_i}$ for downlink crossed timeslots.

The subscript 'i' in the previous expressions was inserted to characterize the receiver 'i' in the target cell as well as to differentiate from the index of summation, which according to equation (4.4) represents the transmitter(s) in the other cells. Table 4.1 summarises all types of inter-cell interference of UTRA-TDD systems when omni-directional antennas are used at base stations and users' equipment. For crossed timeslots, the terms in brackets represent inter-cell interference from those neighbouring cells where the timeslot is used in the same direction as in the target cell.

Pure UL timeslots	$\sum_{UE} I_{UE \rightarrow BS_i} + N_0$
Pure DL timeslots	$\sum_{BS} I_{BS \rightarrow UE_i} + N_0$
Uplink Crossed timeslots	$\left(\sum_{UE} I_{UE \rightarrow BS_i}\right) + \sum_{BS} I_{BS \rightarrow BS_i} + N_0$
Downlink Crossed timeslots	$\left(\sum_{BS} I_{BS \rightarrow UE_i}\right) + \sum_{UE} I_{UE \rightarrow UE_i} + N_0$

Table 4.1 - Inter-cell interference of UTRA-TDD systems

4.3.1 Remarks on the inter-cell interference scenario of UTRA-TDD

According to the previous analysis, inter-cell interference of UTRA-TDD systems corresponds to signals from users' equipment and base stations. This means that interference is the transmitted powers of UEs and/or BSs attenuated by the propagation losses between the transmitter (source of interference) and receiver (in the target cell). Therefore, equation (4.5) can also be expressed as:

$$I_{OTHER} = \sum_{UE} P_{UE} PL_{UE \rightarrow Rx} + \sum_{BS} P_{BS} PL_{BS \rightarrow Rx} \tag{4.6}$$

where $PL_{UE \rightarrow Rx}$ represents the propagation losses between the interference source (UE) and the receiver in the target cell, $PL_{BS \rightarrow Rx}$ corresponds to the propagation losses between the BS in the other cell(s) and the receiver in the target cell, P_{UE} and P_{BS} are the transmitted powers of users' equipment and base stations, respectively. Both transmitted powers can be adjusted by using equation (4.3).

From equation (4.6), it can be seen that the effects of interference will affect the final transmitted powers of the UEs and BSs since users' equipment and base stations must adjust their power in order to compensate for the 'received' interference.

Many works have shown that this kind of problem can be pointed out as a linear equation system problem [41]-[46]. In [46] the behaviour of uplink, downlink and crossed timeslots was described by an innovative analytical model, which provides the determination of interference and power values. Even though the example in [46] was carried out for a two-cell scenario, the model can be extended to a multicell environment. These models are efficient in finding the values of power and interference but it should be clear that a further analysis of the values must be carefully carried out. In other words, it is necessary to verify if these values will not lead to an outage condition.

Power control techniques deal with such a problem and can work very well in minimizing the interference by optimizing transmitted powers of UEs and BSs, thus reducing the probability of an outage condition. However, they can be ineffective in scenarios with high level of interference such as the ones where crossed timeslots occur. One possibility to overcome this drawback relies on applying intelligent dynamic allocation mechanisms to assign timeslots to users' equipment by taking into account this interference and how its effect can be different for every user [44].

Taking into account the relative importance of the various interference patterns, one possible channel allocation strategy could be the following [25]:

- crossed timeslots should be preferably allocated to mobiles closer to their base station since not only the users' equipment but also the base stations transmit with lower power than for the case where the UE is far from base station (cell border). Low power means low generation of interference and, as a consequence, base stations generate higher interference than users' equipment.

- users' equipment near the border between cells should preferably use timeslots assigned to the same direction in both cells. This also seems advantageous from the handover point of view - in the uplink, the capacity required in the new cell after handover takes place has already been taken into account through the intra-cell interference produced by the user while in the old cell.

However, it must be considered whether the above restriction in the allocation of crossed timeslots should apply to UL and DL traffic or especially to one direction (in such a case, the uplink direction is possibly the most critical [40]).

In [35] the influence of not allocating crossed timeslots for UL traffic to users outside a circle of radius r and centre on the base station is studied. The conclusion is that the optimisation of capacity (choice of timeslots of each type and allocation of RUs to the timeslots) is not much influenced by the value of r. This result is encouraging, but does not mean that the above rules are not necessary.

In fact it is observed that when r is increased, the resource utilisation only slightly decreases, the partition between UL, DL and crossed timeslots does not change, but the way RUs are allocated in the adjacent cells changes dramatically when r approaches the radius of the cell. Although a two-cell model was used in [35], the results offer some useful insight into the allocation strategy, which will be further assessed.

4.4 Packing of Resource Units into timeslots

Within a cell, the allocated RUs may be scattered along multiple timeslots (either for a single or multiple calls). Ignoring for a moment the other cells (and in particular the crossed timeslots), there are a few aspects that should be analysed in order to better understand what are the trade-offs that must be taken into account when packing RUs into timeslots.

Let us assume in the first place a high traffic load (but below the congestion level), such that all timeslots are almost fully used. Being N the total number of timeslots, N_{UL} and N_{DL} the number of timeslots allocated respectively for UL and DL traffic so that $N = N_{UL} + N_{DL}$ and, R_{UL} and R_{DL} the total rates for UL and DL traffic, the following relation should ideally hold

$$\frac{N_{UL}}{N_{DL}} = \frac{R_{UL}}{R_{DL}} \qquad (4.7).$$

This will only be approximate in a real case, but the accuracy is not relevant in this analysis. However, when the load is low or moderate, not all RUs need to be used, that is, it would be possible to pack the RUs into a number of timeslots less than N, leaving some free timeslots N_{FREE} so that $N = N_{UL} + N_{DL} + N_{FREE}$. Under this approach, the free timeslots will be allocated to UL and/or DL traffic only when necessary.

In this case one criterion to allocate RUs would be to achieve the best possible packing of RUs into the smallest possible number of timeslots, provided that QoS and power constraints are met. Therefore, timeslots tend to be used at maximum useful capacity or not used at all and the existence of free timeslots eases the process of allocating RUs to new calls.

To achieve this goal fast DCA reallocation should be performed when necessary, taking into account relevant events (begin and end of calls, handover, user mobility, etc.).

A different approach would be to provisionally assign all timeslots either to UL or DL (even if some of them are not yet used), based on the current $\frac{R_{UL}}{R_{DL}}$ ratio and then to progressively adapt the partition according to traffic variations (moving the switching point, together with any required reshuffling). Without any traffic or when the overall traffic is below a given threshold, an equal partition of timeslots between UL and DL could be initially adopted and then, as traffic increases, the switching point would be moved to take the real traffic asymmetry into account [47].

According to this strategy, at low to moderate loads RUs can be spread over all timeslots assigned to each direction, thus reducing the load and interference per timeslot. But, when traffic increases, some packing is progressively required due to the following reasons [25]:

- It may be necessary to free some timeslots, so that they can be allocated to traffic in the opposite direction - this means that the switching point between UL and DL must be moved to cope with traffic asymmetry.
- Spreading RUs would tend to produce similar loads in all timeslots, and therefore when traffic increases the leftover capacity in each timeslot is reduced and could not be enough to allocate the required number of RUs to a new call within a single timeslot. Although it would be possible to allocate RUs in more than one timeslot (multislot operation), the multicode strategy should be attempted in the first place. Therefore, a reshuffling could be necessary to produce a new packing to fulfil this goal.
- Terminal mobility, traffic variation and handover may cause high interference levels and even congestion in some timeslots, while other timeslots still have some spare capacity. Reshuffling will balance interference levels and avoid premature congestion.

Therefore, at high loads, the need for reshuffling arises naturally to achieve best packing as well as levelling the interference over the whole set of timeslots that are almost fully occupied.

As a conclusion, reshuffling (reallocation) can be used to achieve high resource utilisation, to allow flexibility in assigning RUs in multicode (single timeslot) operation and to handle congestion, handover[18] and the dynamic nature of the user environment (mobility and variable traffic).

When considering adjacent cells, the strategy has to take into account the effect of inter-cell interference, and in particular the possible use of crossed timeslots. In one extreme case, using disjoint timeslots in adjacent cells avoids inter-cell interference; this requires a best packing strategy but may lead to under-utilisation of resources. On the other hand, fully sharing of timeslots (including crossed timeslots) between cells allows RUs within each cell to be spread over all the assigned timeslots to each direction, even if different switching points are used in neighbouring cells. The trade-offs must be carefully analysed.

[18] As mentioned in Section 4.2, handover can result in cell change or not. In case where handover does not cause cell change, it is referred to as intra-cell handover. Intra-cell handover is a requirement for DCA to adapt effectively to interference and variations in traffic and can be a consequence of a channel reallocation process [4].

4.5 Dynamic Channel Allocation Strategies

Several channel allocation mechanism have been proposed in the literature for application in mobile communications systems which try to cope with the previous aspects. Excellent reviews of most of such mechanisms can be found in [2]-[4].

Regarding DCA strategies, they can be classified as: centralized and decentralized schemes. Centralized algorithms often require a control centre to handle the channel allocation process. The allocation/reallocation process is carried out based on information obtained from users' equipment and base stations. In the UMTS systems, this procedure can be made by locating the centralized DCA algorithms in the radio network controller (RNC), which concentrates all necessary information of a group of cells [48]. The disadvantage of centralized schemes is that a great amount of signalling is necessary to supply the vital information about the load, interference, and channel status [32]. Decentralised or distributed DCA mechanisms differ from centralized schemes by the fact that the channel allocation decision is based on local information which allows a single cell to handle the channel allocation/reallocation process with DCA algorithm of low complexity. Although a decentralized DCA algorithm may have a limited knowledge about the entire system state [32], the exchange of some status information with other cells is possible in order to increase the DCA algorithm performance [4].

In all these types of DCA algorithms, co-channel interference (inter-cell interference) plays an important role in the channel allocation process [49] and, as mentioned before, the dynamic channel allocation problem is to find a channel assignment within a cell that avoids/limits co-channel interference, maintains the link quality and maximizes the system capacity. Little research has been undertaken to design DCA algorithms that are tailored to the interference patterns of UTRA-TDD systems, mainly in the crossed timeslots. This thesis addresses the design of a novel DCA strategy that mitigates the harmful effects of inter-cell interferences through the use of spatial filtering feature of smart antennas. Eliminating the effects of inter-cell interference we gain more freedom in the channel allocation process, improving system performance and taking the benefits of flexibility of UTRA-TDD systems for adapting to asymmetrical traffic patterns. However, before describing the methodology, we will review in the following section some strategies that gave us some insight for the DCA strategy proposed in this work.

4.5.1 Related Work

Based on channel measurements, DCA schemes try to allocate to each connection the RUs that seem to offer the best available transmission quality while meeting the algorithm's constraints [30]. To exploit the inherent advantages of UTRA-TDD systems, a quality based DCA algorithm like the one proposed in [50] may be used as a general guideline:

- For each time timeslot, a long and short-term recording and statistical evaluation of interference measurements is applied. For this purpose, power and quality based measurements are performed both in the user and the base station.
- Based on this evaluation, for each cell, the RNC creates a priority list of all timeslots, which is updated dynamically. The highest priority could be assigned to that timeslot which exhibits the lowest interference level.
- The allocation and reallocation of physical channels especially for packet services could be performed within the RNC controlling the respective cell, which ensures a fast reaction to varying interference conditions.
- The number of used timeslots is minimized. If needed, for this purpose, the resources of active links can be reshuffled within each cell.

4.5.1.1 Best Packing (Interference matrix based scheme)

In [51]-[53] locally centralized architectures for resource allocation in micro-cellular environments are proposed. The concepts of *bunch* of cells (as a group of cells strongly interconnected) and *zone* (as an area that is covered homogeneously by one or several base stations) are introduced.

Channel allocation in a bunch is made by the RNC for incoming and outgoing calls. Resources within the bunch are allocated according to a Best Packing strategy. A compatibility matrix (the so-called structure matrix) of all cells within the bunch is progressively built. The Best Packing strategy is then used on the basis of this structure matrix. A channel assigned to a call will block the use of this channel in zones located at a distance lower than the interfering radius. In a zone, a channel could be free, used or blocked. The Best Packing strategy consists in allocating to a call a free channel C that would block the highest possible number of already blocked neighbouring zones for channel C.

4.5.1.2 Timeslot Scoring Algorithm

This algorithm [30] was designed for multimedia traffic in TD/CDMA systems. The algorithm tries to provide each service class with an appropriate Quality of Service (QoS). It can be described by the following steps:

- Each service type has its own set of UL and DL interference limits. This interference limits suggest the borderline where the data can be transmitted and received appropriately. Also, the optimal number of RUs required per frame for UL and DL must be parameterised for each service. This parameter allows a system operator to provide different packet data service classes, based on transmission speed.

- At the time of initiation of a connection, the call measures the signal quality from local base stations and sends a connection request to the station with the best signal quality. Then DCA obtains interference data for each timeslot. In UL, the interference is measured at the base station position, while for DL the interference is measured at the position of the user.
- DCA considers the interference data. Four points are given to any timeslot with interference level lower than the predefined threshold and with free RUs. Otherwise, one point will be taken from that timeslot (score = -1) and it will be dropped from further consideration.
- DCA now considers the number of unallocated RUs within the frame and the number of RUs required by the call's service type. If a timeslot has enough RUs required by the service, another four points are given.
- If the timeslot has RUs for only 50% of the required capacity, two extra points are given. Otherwise, if the timeslot can support a connection with at least one RU, only one point is given.
- Finally, the timeslot with the highest score (points) is chosen. If two or mores timeslots have the highest score, any of them can be chosen. The algorithm selects the one that is found first. If both UL and DL allocations must be done, DCA must be able to find RUs in both directions. Otherwise, the call will be dropped.

To make a decision, DCA makes use of interference measurements, interferences limits and RUs requirements parameters of each service; however, the number of UL and DL timeslots is fixed, that is, the traffic pattern is maintained constant.

4.5.1.3 Least Interfered Resource (LIR)

In this algorithm [54] [55] a simple interference-based DCA method, operating decentralized at each single base station, is introduced for speech service. It always assigns the *Least Interfered Resource* (LIR) in DL and UL to the connection. In addition, it allows setting interference thresholds for both link directions to decide whether a timeslot provides an adequate quality or is otherwise unusable. Depending on the threshold settings, the number of rejected (blocked) and failed connections can be influenced since the blocking probability increases as the interference threshold decreases. Moreover, the proposed DCA offers the possibility to reallocate resources depending on the current connection quality and additional features. For speech services, the quality criteria can be the *Bit Error Ratio* (BER) of the connection. If for example the BER is higher than a predefined value for a certain period of time and the connection is going to fail, a reallocation request can be generated and executed in DCA and possibly better resources can be searched. To avoid system instabilities, reallocations are only permitted after a certain period of steady RU allocation.

4.5.1.4 Reuse Partitioning

In the reuse partitioning strategies each cell in the system is divided into two or more co-centric sub-cells. Since the inner zones are closer to the base station located at the centre of the cell, the power level required to achieve a desired SIR in the inner zones can be much lower compared to the outer zones [2].

In [40] a similar approach was adapted to a three-cell scenario. A pattern of hexagonal cells was assumed. Each cell was divided in three concentric regions (A, B and C) separated by circumferences of radius r_1 and r_2 ($r_1<r_2<r_3$, being r_3 the coverage of the cell). If in one cell the timeslots are allocated to UEs in the order (A, B, C), the allocations in the other two cells should be based on permutations of this pattern, that is, (B, C, A) and (C, A, B). The method required that timeslots should be allocated to UEs in the three cells in different orders to maximize the probability that a timeslot is allocated to UEs located in different regions in these cells. One criterion to define the size of each region could be considering that they have the same area, i.e., there are approximately the same number of UEs in each region, assuming a uniform distribution of UEs on each cell. Another criterion could be based on attenuation ranges from the BS. This algorithm is only applied to pure UL and DL timeslots, since crossed timeslots were first allocated to mobiles closer to the base station.

4.5.1.5 TS-Opposing Technique

In [32] a cellular TDMA/CDMA-TDD system is analyzed and a technique named 'TS–opposing' is introduced. This method is intended to enable a cellular TDMA/CDMA-TDD system to apply cell independent channel asymmetry. The algorithm starts when the user in the cell of interest is requested to transmit with higher power than the maximum power transmitted, i.e., the state at which outage or service degradation would occur. The interference in all timeslots of neighbouring cells is monitored. Afterwards, a check is made to examine if there is one timeslot n in the neighbouring cell (e.g., cell c_j) that would cause less interference than the current timeslot k. If this is true and the timeslots n is used for RX while the timeslot k was used for transmission (TX), or vice versa, then the neighbouring cell c_j interchanges the timeslot n with the timeslot k. This results in TS-opposing timeslots with respect to c_j. However, although the results presented by the author are acceptable for the example presented in the paper, these were generated using a series of mathematical models and computer simulations. They are therefore subject to certain limitations in connection with the assumptions supporting the models and simulations used.

4.5.1.6 Dynamic Channel Allocation using Smart Antennas

As can be noted in previous examples of DCA strategies, they are interference-based DCA techniques and they do not directly solve the interference problem; instead, they try to solve it

indirectly, making the algorithms work hard in finding the best combination (in terms of some cost function) for allocating the users into the system [56]. In fact, those algorithms are designed to manage interference or, in other words, to find out a specific combination that tries to reduce as much as possible its influence in the channel allocation process [57]. However, in an ideal scenario with no interference or with the interference mitigated, the channel allocation procedure could be based only on available system resources, since the interference would not be the main concern any longer [38]. Recalling the analysis carried out in section 4.3, it was shown that inter-cell interference is related to transmitted powers of UEs and BSs, that is, these powers generate the interference. At first glance, if these entities do not transmit, no interference is generated. This, of course, is nonsense! Then, one possibility of eliminating such interference is through a filtering process, where the desired signal is allowed to pass while the undesired ones are blocked or filtered. Such a filtering process is feasible by using the spatial filtering of smart or adaptive array antennas. Figure 4.5 illustrates how the smart antennas can be used for mitigating the inter-cell interference in a typical mobile communication system.

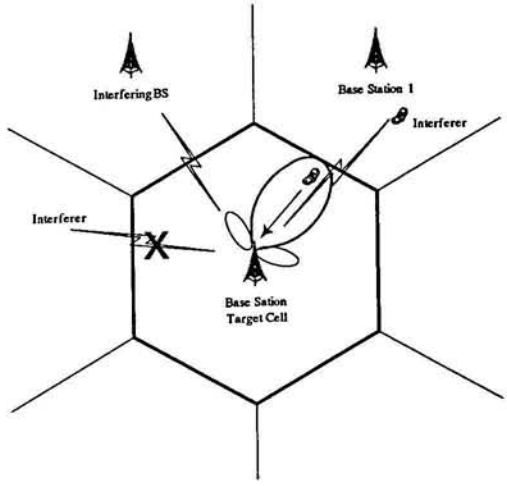

Figure 4.5 - Spatial filtering of smart antennas in a typical mobile communication system

The main lobe is pointed at the desired signal whereas nulls and minor lobes filter or attenuate the effects of the undesired signals (interferers). As shown in section 2.3, the use of spatial filtering of smart antennas has gained much attention and many research works have reported its use in mobile communication systems [58]-[66]. However, the aim of the majority of these works is related the reduction of interference [67] for improving the system performance, by providing QoS for heterogeneous traffic types [68]. Few works have applied smart antennas concomitantly with a DCA strategy, especially addressing the interference problem in crossed timeslots. In [69], a minimum variance distortionless response (MVDR) and Fourier beamforming in downlink are used for providing different rates of asymmetric traffic services in all cells without the strong direction interference problem. However, such results were demonstrated assuming a seven cells cluster configuration where a central cell is surrounded by three cells (called asynchronous cells), which

have the timeslots in opposite direction of the central cell. The other three cells have the timeslots with the same direction of the central cell. Although this method has clearly advantages, the previous assumption limits the flexibility for asymmetrical traffic of TDD/CDMA-based systems, such as UTRA-TDD systems.

The interference problem in the crossed timeslots is analysed in [70] and [71]. In [70] a tri-sector cellular system is considered. Each cell is divided in three sectors, which use different sets of spreading codes. Taking into account the additional orthogonality inherently due to the directivity of directional antenna, the interference-resolving algorithm starts by associating the different sectors of adjacent cells to form a virtual hexagonal cell; in that way, this virtual cell is completely covered by the three directional antennas, whose interference is mitigated by different and orthogonal sets of codes. This strategy seems to work well but can have certain drawbacks when the set of codes cannot be totally different.

In [71] a different approach is adopted; the crossed timeslot allocation (CTSA) based on smart antenna starts when a situation in which different and asymmetric traffic patterns among cells occur. When two neighbouring cells are in the same crossed timeslot and if the user equipment is located in within the connecting line of the base stations of these two cells, then, in this direction, shutdown the downlink transmission or shutdown of the uplink transmission is performed. The weight vector is adjusted to form a null in this direction. The system arbitrates which transmission mode is chosen with the highest priority.

4.6 Allocation Criteria

As can be concluded from the previous analysis, all excellent DCA strategies presented are interference-based schemes. In fact, as far as UTRA-TDD systems are concerned, the inter-cell interference in the crossed timeslots represents one of critical issues that the DCA should be able to cope with. In the previous sections, we described the complex interference scenarios of UTRA-TDD systems, showed how the RUs are packed into timeslots and analysed some DCA strategies. To complete this chapter, we will analyse an issue that deals with criteria to allocate specific RUs to users' equipment.

The following analysis will be based on the approaches adopted in [25] and we will consider a 10 ms frame structure as described in section 3.4.3.1. Each frame is subdivided into 15 timeslots numbered from 0 to 14 that can be assigned either to uplink or to downlink (see Figure 4.6). Up to 16 simultaneous transmissions are allowed per timeslot through the allocation of different OVSF (Orthogonal Variable Spreading Factor) codes to terminals. Different base stations are synchronized and may have different asymmetry patterns, as depicted in Figure 4.1. Without loss of generality, a single switching point is considered in each frame, so that the timeslots where UE

to UE and BS to BS interference occur fall in the middle of the frame (see Figure 4.6). In any case, the proposed methods could be extended to the case with multiple switching points per frame.

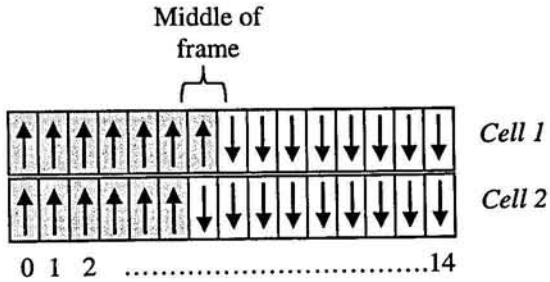

Figure 4.6 - UTRA-TDD frames

4.6.1 Ordered distribution

A first criterion could be to assign timeslots in an ordered way, by avoiding to use, as much as possible, those timeslots in the middle of the frame. Then, the allocation would begin by assigning uplink timeslot 0 and downlink timeslot 14 for the first users in the system until the maximum number of 16 simultaneous transmissions is reached (because there are 16 OVSF codes with SF=16). When this situation occurs, timeslot 1 for the uplink and timeslot 13 for the downlink will be allocated, and so on, until having allocated all the required resources. Although it is assumed that each user makes use of a single OVSF code, the use of multirate (i.e., several codes for a certain user) would be straightforward.

In a low load situation this criterion avoids completely interference between uplink and downlink in crossed timeslots, and only under heavy load conditions or whenever there is a high difference in the asymmetry pattern between neighbouring base stations this interference may arise.

4.6.2 Criterion based on Time Advance (TA)

A second possibility relies on distributing timeslots among terminals by taking into account the distance to the base station where they are registered. Then, the timeslots close to the switching point will be assigned to those terminals located closer to the base station, as it is expected that these terminals suffer less from the effects of interference, while the timeslots with a higher protection against interference will be assigned to the users located far from the base station.

The distance can be measured by means of the time advance information that is collected in UTRA TDD. Particularly, it is possible to have uplink synchronization with a 1/4 chip time advance resolution. Being the chip rate 3.84 Mc/s, this leads to a resolution in the measured distance of 9.76 m [72]. Then, the first approach to the proposed scheme would be to allocate the following uplink and downlink timeslots to a user with time advance TA (i.e., at distance $c \cdot TA/2$, with $c=3 \cdot 10^8$ m/s):

$$UL\ slot = \left\lfloor \left(1 - \frac{TA \cdot c}{2R}\right) \cdot SP \right\rfloor \tag{4.8}$$

$$DL\ slot = SP + \left\lfloor \frac{TA \cdot c}{2R}(15 - SP) \right\rfloor \tag{4.9}$$

where $\lfloor x \rfloor$ denotes the highest integer value lower than x, R is the cell radius and SP is the number of the timeslot immediately after the switching point.

In any case, if the number of users is small enough, it will be interesting to avoid the use of the timeslots in the middle of the frame (region close to the switching point), as in the ordered criterion. As a result, after the previous allocation, a rearrangement is performed by trying to move the users allocated close to the switching point to the other timeslots if there is room outside this region. Then, for low loads, this method also completely avoids interference between uplink and downlink. The allocation will be dynamically changed as the terminals move.

4.6.3 Criterion based on Path Loss measurement

This criterion decides the most appropriate timeslot for a given terminal depending on the measured path loss with respect to its corresponding base station, including shadowing. Notice that this strategy can be applied even if no time advance information is collected in the system simply by measuring the received power in a channel whose transmitted power is broadcast by the base station (as it occurs in UTRA-TDD with the P-CCPCH channel [72]). This leads to defining the uplink and downlink timeslots for a mobile with path loss PL (dB) as:

$$ULslot = \left\lfloor \left(\frac{PLmax - PL}{PLmax - PLmin}\right) SP \right\rfloor \tag{4.10}$$

$$DLslot = SP + \left\lfloor \left(\frac{PL - PLmin}{PLmax - PLmin}\right)(15 - SP) \right\rfloor \tag{4.11}$$

PLmax (dB) is calculated as the corresponding value of the propagation loss at a distance equal to the cell radius without shadowing, and *PLmin* (dB) is the propagation loss at a reference distance *dmin* close to the base station that has been set to 20 m. These expressions only apply for $PLmax > PL > PLmin$. Whenever $PL \geq PLmax$ due to shadowing, $ULslot = 0$ and $DLslot = 14$. Similarly, if $PL \leq PLmin$, $UL\ slot = SP - 1$ and $DL\ slot = SP$. The same rearrangement as in the TA criterion will be performed if there are free resources outside the region close to the switching point.

4.7 Concluding Remarks

The demand for high bit rate multimedia services with different QoS requirements envisaged for 3G systems increases the system complexity and, as a consequence, requires efficient use of scarce radio resources. In 3G UMTS systems, the radio resources are managed by a set of so-called Radio Resource Management (RRM) algorithms, which were described in this chapter. Emphasis was

given to Dynamic Channel Allocation (DCA), an inherent algorithm of UTRA-TDD systems. A detailed description of the interference problem of UTRA-TDD systems was carried out as well as it was shown how these harmful effects can affect the performance of the allocation process. The way in which the RUs are packed into timeslots was discussed and some criteria to allocate specific RUs to users' equipment were highlighted.

Different DCA strategies were described and analysed. All of them are interference-based strategies and it was also shown that they do not solve the interference problem directly. In fact, they are interference avoidance methods, which try to find a combination between timeslots that minimize the mutual effects of interference. In this chapter, it was shown that such effects can be mitigated by using the spatial filtering feature of smart antennas. However, few works have addressed this subject and, even those do not focus directly on the interference problem in crossed timeslots.

In the next chapter we will describe the methodology proposed in this thesis that is focused on the interference problem in crossed timeslots, by using the spatial filtering property of smart antennas together with a DCA strategy, with the goal of attaining the maximum possible capacity of the system.

4.8 Chapter References

[1] E. P. Lyle Jr., "The Advance of Wireless", *World's Work*, pp. 5843-5848, February 1905.

[2] I. Katzela, M. Naghshineh, "Channel Assignment Schemes for Cellular Mobile Telecommunication Systems – a Comprehensive survey", *IEEE Wireless Communications*, Vol.3, No. 3, pp.10-31, June 1996.

[3] K. Okada, F. Kubota, "On Dynamic Channel Assignment Strategies in Cellular Mobile Radio Systems", *IEICE Trans. Fundamental*, Vol.E75-A, No.12, pp. 1634-1641, December 1992.

[4] A. Hać, C. Mo, "Dynamic Channel Assignment in Wireless Communication Networks", *International Journal of Network Management*, Vol. 9, pp. 44-66, 1999.

[5] L. Jorguseski, E. Fledderus, J. Farserotu, R. Prasad, "Radio Resource Allocation in Third-Generation Mobile Communication", *IEEE Communications Magazine*, Vol. 39, No. 2, pp.117-123, February 2001.

[6] O.Sallent, J. Perez-Romero, R. Agusti, F. Casadevall, "Provisioning multimedia wireless networks for better QoS: RRM strategies for 3G W-CDMA", *IEEE Communications Magazine*, Vol.41, No.2, February 2003.

[7] 3GPP TS 25.401 v6.2.0 (2003-12)- UTRAN overall description

[8] H. Holma, A. Toskala, "WCDMA for UMTS: Radio Access for Third Generation Mobile Communications", 2nd Edition, *John Wiley & Sons*, Ltd., ISBN 0-470-84467-1, p.391, 2002.

[9] ARROWS D04 Deliverable, "System Specification and Radio Resource Management Algorithms: Identification and requirements", March 2001. (available in www.arrows-ist.upc.es)

[10] 3GPP TR 25.922 v5.2.0 (2003-12)- Radio Resource Management Strategies

[11] E. Dahlman, P. Beming, J. Knutsson, F. Ovesjö, M. Persson, C. Roobol, "WCDMA – The Radio Interface for Future Mobile Multimedia Communications", *IEEE Transaction on Vehicular Technology*, Vol. 47, No. 4, pp. 1105-1118, November 1998.

[12] G. Ostermayer, P. Slanina, C. Holzl, C. Meclenbruker, F. Raji, T. Stadler, "Scheduling Performance for UTRA TDD mode", *Proceedings of the IEEE/AFCEA EUROCOMM 2000*, pp. 212-216, May 2000.

[13] J.Pérez-Romero, R. Agustí, O. Sallent, F. Casadevall, "Packet Transmission strategies to provide Quality of Service in a TDD TD/ CDMA system", *Proceedings of the 12th International Symposium on Personal, Indoor and Mobile Radio Communications – PIMRC'01*, Vol.2, pp.147-151, 2001.

[14] R. Prasad, W. Mohr and, W. Konhäuser, "Third Generation Mobile Communication Systems", *Artech House publishers*, ISBN 1-58053-082-6, p.387, 2000.

[15] A.H. Solana, A.V. Bardaji, F. C. Palacio, "Performance Analysis of Packet Scheduling Strategies for Multimedia Traffic in WCDMA", *Proceedings of the 55th Vehicular Technology Conference*, Vol. 1, pp.155-159, May 2002.

[16] L. C. Godara, "Applications of Antenna Arrays to Mobile Communications, Part I: Performance, Improvement, Feasibility, and System Considerations", *Proceedings of the IEEE*, Vol. 85, No. 7, pp. 1031-1060, July 1997.

[17] J. Zander, "Transmitter Power Control for Co-Channel Interference Management in Cellular Radio Systems", *4th WINLAB Workshop*, New Brunswick, NJ, Oct 1993

[18] D.M. Novakovic and M. Dukic, "Evolution of the Power Control Techniques for DS-CDMA Toward 3G Wireless Communication Systems", *IEEE Communications Surveys*, 4th Quarter, pp.2-15, 2000.

[19] M. P. J. Baker, T. J. Moulsley, "Power Control in UMTS Release'99", *Proceedings of the First International Conference on 3G Mobile Communication Technologies*, pp. 36-40, March 2000.

[20] S.A. Grandhi, R. Vijayan, D.J. Goodman, J. Zander, "Centralized Power Control in Cellular Radio Systems", *IEEE Transaction on Vehicular Technology*, Vol. 42, No. 4, pp. 466 – 468, November 1993.

[21] J. Zander, "Distributed Co-Channel Interference Control in Cellular radio Systems", *IEEE Transactions on Vehicular Technology*, Vol. 41, No. 3, pp. 305-311, August 1992.

[22] P. S. Kumar, R. D. Yates, J. Holtzman, "Power Control based on Bit Error Rate (BER) measurements", *Proceedings of the Military Communications Conference – MILCOM'95*, Vol. 2, pp.617-620, 1995.

[23] 3GPP TS 25.101 v5.1.0 (2001-12), "UE Radio Transmission and Reception (FDD)"

[24] 3GPP TS 25.102 v4.5.0 (2002-06), "UE Radio Transmission and Reception (TDD)"

[25] ARROWS D06 Deliverable, "Conceptual Studies on Radio Resource and QoS Management Algorithms", March 2002. (available in www.arrows-ist.upc.es)

[26] R. Assarut, K. Kawanishi, R. Deshpande, U. Yamamoto, Y. Onozato, "Performance Evaluation of Orthogonal Variable-Spreading-Factor Code Assignment Schemes in W-CDMA", *Proceedings of the IEEE International Conference on Communications*, Vol. 5, pp.3050-3054, April/May 2002.

[27] A. N. Rouskas, D. N. Skoutas, "OVSF Codes Assignment and Reassignment at the Forward Link of W-CDMA 3G Systems", *Proceedings of the 13th IEEE International Symposium on Personal, Indoor and Mobile Radio Communication*, Vol. 5, pp. 2404-2408, September 2002.

[28] F. Shueh, Wen-Shyen E. Chen, "Code Assignment for IMT-2000 on Forward Radio Link", *Proceedings of the 53rd Vehicular Technology Conference – VTC'01 Spring*, Vol. 2, pp. 906-910, May 2001.

[29] U. Yamamoto, H. Hasanudin, Y. Onozato, "Reconstruction Methods of Tree Structure of Orthogonal Spreading Codes for DS-CDMA", *IEICE Transactions on Fundamentals*, Vol.E83-A, No. 11, November 2000.

[30] T. Kriengchaiyapruk, I. Forkel, "Dynamic Allocation of Capacity in UTRA-TDD Sytems", *Proceedings of the 2nd International Conference on 3G Mobile Communication Technologies*, pp.262-266, March 2001.

[31] O. Lethtinen, J. Kurjenniemi, "UTRA TDD Dynamic Channel Allocation in Uplink with Slow Reallocation", *Proceedings of the 57th IEEE Semi-annual Vehicular Technology Conference*, Vol.2, pp.1041-1405, April 2003.

[32] H. Haas, S. McLaughlin, "A Dynamic Channel Assignment Algorithm for a Hybrid TDMA/CDMA-TDD Interface Using the Novel TS-Opposing Technique", *IEEE Journal on Selected Areas in Communications*, Vol.19, No.10, pp.1831-1846, October 2001.

[33] D. G. Jeong, W.S. Jeon, "CDMA/TDD system for Wireless Multimedia Services with Traffic Unbalance Between Uplink and Downlink", *IEEE Journal on Selected Areas in Communications*, Vol. 17, No. 5, pp.939-946, May 1999.

[34] L. Chen, S. Yoshida, H. Murata, S. Hirose, "A Dynamic Timeslot Assignment Algorithm for Asymmetric Traffic in Multimedia TDMA/TDD Mobile Radio", *IEICE Transactions on Fundamental*, Vol. E81-A, No. 7, July 1998.

[35] W.S. Jeon, D. G. Jeong, "Comparison of Time Slot Allocation Strategies for CDMA/TDD Systems", *IEEE Journal on Selected Areas in Communications*, Vol. 18, No. 7, pp. 1271-1278, July 2000.

[36] 3GPP TS 25.942 v6.1.0. (2003-09), "RF Systems Scenarios"

[37] M. Vollmer, M. Haardt, J. Gotze, "Comparative Study of Joint-Detection Techniques for TD-CDMA Based Mobile Radio Systems", *IEEE Journal on Selected Areas in Communications*, Vol. 19, No. 8, pp.1461-1475, August 2001.

[38] A. L. S. Castro, J. Ruela, "Autonomous Dynamic Resource Allocation for TD/CDMA-TDD Systems", *Proceedings of the 6th International Symposium on Wireless Personal Mobile Communications – WPMC'03*, Japan, October 2003.

[39] H. Holma, S. Heikkienen, O. Lethinen, A. Toskala, "Interference Considerations for Time Division Duplex Mode of the UMTS Terrestrial Radio Access", *IEEE Journal on Selected Areas in Communications*, Vol. 18, No. 8, pp.1386-1393, August 2000.

[40] A. L. S. Castro, R. N. Castro, R. A. Castro, J. Ruela, "Dynamic Channel Allocation in UTRA-TDD Systems Considering Asymmetrical Traffic", *Proceedings of the IST Mobile & Wireless Communications Summit 2003*, Vol. 2, pp.446-450, June 2003.

[41] G.J. Foschini, Z. M., "A simple Distributed Autonomous Power Control Algorithm and its Convergence", *IEEE Transaction on Vehicular Technology*, Vol. 42, pp. 641-646, November 1993.

[42] F. Rashid-Farrokhi, L. Tassiulas, and K.J.R. Liu, "Joint optimal power control and beamforming in wireless networks using antenna arrays", Technical *Report CSHCN T.R. 97-33*, Electrical Engineering and Institute for Systems Research, University of Maryland, USA, June, 1996.

[43] W. Song, J. Lim, "Power Control with Fast Convergence for Wideband CDMA", *IEICE Transaction on Communications*, Vol. E85-b, No. 6, pp.1206-1208, June 2002.

[44] H. Holma, G. Povey, A. Toskala, "Evaluation of Interference between Uplink and Downlink in UTRA/TDD", *Proceedings of the 50th IEEE Vehicular Technology Conference VTC'99 - Fall*, Vol.5, pp. 2616-2620, 1999.

[45] J.S. Blogh and L. Hanzo, "Third-generation Systems and Intelligent Wireless Networking-Smart Antennas and Adaptive Modulation", *John Wiley & Sons*, Ltd, ISBN 0470-84519-8, 2002.

[46] ARROWS D13 Deliverable, "First Report on the evaluation of RRM algorithms by simulation",July 2002. (available in www.arrows-ist.upc.es)

[47] T. Kriengchaiyapruk, I. Forkel, "Adaptive Switching Point in TD/CDMA Systems", *Proceedings of the 56th Vehicular Technology Conference – VTC'02* , Vol. 3, pp.1456-1460, September 2002.

[48] C. Mihailescu, X. Lagrange, P. Godlewski, "Dynamic Resource Allocation for Packet Transmission in TDD TD-CDMA Systems", *Proceedings of the 49th Vehicular Technology Conference*, Vol. 2, pp. 1737-1741, May 1999.

[49] Y. Argyropoulos, S. Jordan; S. P. R. Kumar, "Dynamic Channel Allocation in Interference-Limited Cellular Systems with Uneven Traffic Distribution", *IEEE Transaction on Vehicular Technology*, Vol. 48, No. 1, January 1999.

[50] M. Haardt, A. R. Koehn, S. Oestreich, M. Purat, V. Sommer, T. Ulrich, "The TD-CDMA Based UTRA TDD Mode", *IEEE Journal on Selected Areas in Communications*, Vol.18, No. 8, pp.1375-1385, August 1999.

[51] X. Lagrange, Ph. Godlewski, A. G. Acx, C. Mihailescu, "Dynamic Resource Allocation in Locally Centralized Cellular Systems", *Proceedings of the IEEE Vehicular Technology Conference*, Ottawa, Canada, May, 1998.

[52] C. Mihailescu, X. Lagrange, Ph. Godlewski, "Performance Evaluation of a Dynamic Resource Allocation for UMTS-TDD Systems", *Proceedings of the IEEE Vehicular Technology Conference*, pp. 2339-2343, 2000.

[53] C. Mihailescu, X. Lagrange, Ph. Godlewski, "Dynamic Resource Allocation for UMTS TD-CDMA Systems", *Proceedings of the 3rd European Personal Mobile Communication Conference(EPMCC)*, Paris, France, March 1999.

[54] I. Forkel, T. Krienchaiyapruk, B. Wegmann, E. Schulz, "Dynamic Channel Allocation in UMTS Terrestrial Radio Access TDD Systems", *Proceedings of the IEEE Vehicular Technology Conference – VTC'01 Spring*, Rhodes, Greece, May 2001.

[55] I. Forkel, T. Krienchaiyapruk, "Management of Circuit and Packet Switched Data in UMTS Terrestrial Radio Access Networks", *Proceedings of the IEEE International Conference on Third Generation Wireless and Beyond*, San Francisco, USA, May-June, 2001.

[56] J. C.-I. Chuang, "Performance Issues and Algorithms for Dynamic Channel Assignment", *IEEE Journal on Selected Area in Communications*, Vol. 11, No. 6, pp. 955-963, August 1993.

[57] M. Lindström, "Improved TDD Resource Allocation through Inter-mobile Interference Avoidance", *IEEE Vehicular Technology Conference 2001 Spring*, Rhodes Island, Greece, May 6-9, 2001.

[58] P.H. Lehne and M. Pettersen, "An Overview of Smart Antenna Technology for Mobile Communications Systems", *IEEE Communications Surveys*, 4th Quarter, Vol.2, No.4, pp.2-13, 1999.

[59] L. C. Godara, "Applications of Antenna Arrays to Mobile Communications, Part II: Beam-forming and Direction-of-arrival Considerations", *Proceedings of the IEEE*, vol.85, n0.8, pp. 1195-1245, August, 1997.

[60] P. Cardieri, "Resource Allocation and Adaptive Antennas in Cellular Communications", *PhD Thesis*, Faculty of the Virginia Polytechnic Institute and State University, September 2000, USA.

[61] S. Bellofiore, C.A. Balanis, J. Foutz and A. Spanias, "Smart-Antenna Systems for Mobile Communication Networks- Part 2: Beamforming and Network Throughput", *IEEE Antennas and Propagation Magazine*, Vol.44, No. 4, pp. 106-114, August 2002.

[62] R. M. Bueher, A. G. Kogiantis, Shang-chich Lin, Jiann-an Tsai and D. Uptegrove, "Intelligent Antennas for Wireless Communications – Uplink", *Bell Labs Technical Journal*, Vol. July-September, pp.73-103, 1999.

[63] S. C. Swales, M.A. Beach, D.J. Edwards and, J.P. Mcgeehan, "The Performance Enhancement of Multibeam Adaptive Base-Station Antenna for Cellular Land Mobile Radio Systems", *IEEE Transactions on Vehicular Technology*, Vol.39. No. 1, pp. 56-67, February 1990.

[64] Ahmed El Zooghby, "Potentials of Smart Antennas in CDMA Systems and Uplink Improvements", *IEEE Antennas and Propagation Magazine*, Vol. 43, No. 5, pp.172-177, October 2001.

[65] M. Chryssoumallis, "Smart Antennas", *IEEE Antennas and Propagation Magazine*, Vol. 42, No. 3, pp.129-136, June 2000.

[66] A. O. Boukalov, Sven-Gustav Häggman, "Systems Aspects of Smart-Antenna Technology in Cellular Wireless Communications – An Overview", *IEEE Transactions on Microwave Theory and Techniques*, Vol. 48, No.6, pp.919-929, June 2000.

[67] B. K. Ng, E. S. Sousa, "Performance Enhancement of DS-CDMA System Using Overlapping Sectors With Interference Avoidance", *IEEE Transaction on Wireless Communication*, Vol.2, No.1, pp. 175-185, January 2003.

[68] S.H. Marikar and L.A. DaSilva, "Resource Management in Third Generation Mobile Communication Systems Employing Smart Antennas", *Proceedings of the IEEE INFOCOM 2002*, pp. 1461-1469, June 2002.

[69] Chiung-Jang Chen, Li-Chun Wang, "Interference Suppression in TDD/CDMA Cellular Systems with Asymmetric traffic Using MVDR Beamforming", *Proceedings of the IEEE Vehicular Technology Conference – VTC'02 Fall*, Vol.1, pp.141-145, 2002.

[70] Li-Chun Wang, Shi-Ye Huang, Yu-Chee Tsseng, "A Novel Interference-Resolving Algorithm to Support Asymmetric Services in TDD-CDMA Systems with Directional Antennas", *Proceedings of the Vehicular Technology Conference – VTC-'02 Spring*, Vol.1, pp.327-330, 2002.

[71] Y. Cao, B. Zhou, C. Li, "A Novel Allocation Scheme to Enhance Resource Utilization in CDMA/TDD", *Proceedings of the International Conference on Communication Technology*, Vol. 2, pp. 821-824, April 2003.

[72] 3GPP TS 25.224 v 3.6.0, "Physical Layer Procedures (TDD)".

5
Dynamic Channel Allocation Methodology

5.1 Introduction

This chapter is intended for describing the methodology adopted in this thesis. For this purpose, it will be divided in three main sections. As explained below, the first one will describe the simulation environment, which was the key tool in this work.

In the second section an analytical model is derived to describe the behaviour of the three types of timeslots: uplink, downlink and crossed timeslots. This analytical model assumes that intra-cell interference is negligible as described in section 4.3. This greatly simplifies the analytical model and allows deriving important conclusions that highlight the major factors that contribute to interference in each of the three cases under analysis.

In the third section, some reference scenarios are analysed in order to derive some basic allocation rules used in the definition of DCA algorithms. Users' equipment are placed in particular locations (close to a base station and near a cell border) and timeslots are allocated to users' equipment in pre-defined ways. Interference and power values are obtained by simulation and then compared to the corresponding values calculated with the analytical model. Some preliminary alternatives for DCA strategies are considered in the present chapter and justified taking into account the analysis of the results derived from the analytical model and confirmed by simulation of simple cases. Simulations were carried out using the OPNET™ tool for which an UTRA-TDD system simulator was developed. Therefore, it is worth first describing the simulation environment as well as the UTRA-TDD simulator developed and used in this work.

5.2 Simulation Environment

The UTRA-TDD system level simulator was developed to assist in the evaluation of the proposed DCA strategies. The emphasis of the UTRA-TDD simulator was on the distinctive features of UTRA-TDD, that is, the organization of the frames into timeslots, for the purpose of resource allocation, and the Dynamic Channel Allocation (DCA) mechanisms.

The strategy adopted in the design of the simulator was based on two main requirements:

- An accurate and detailed representation of the specific UTRA-TDD mechanisms, while those mechanisms with a minor impact on the resource allocation strategies were somehow simplified;

- A high efficiency in the execution of simulation runs, reducing as much as possible the overheads associated with both the processing of a high number of events and the interprocess communication mechanisms.

The architecture of the simulator was optimised to fulfil the above requirements, as briefly described in the following paragraphs. The system level simulator uses the simulation platform provided by the OPNET™ tool [1][2], which operates at three different levels:

- **Network level:** It represents the scenario to be simulated and is built by deciding the geographical positions of the different simulated entities (nodes) and their interconnections.
- **Node level:** Each node represents a physical entity in the network. The behaviour of each node is simulated by means of a set of interconnected processes. A node contains a set of attributes that can be defined by the user depending on the scenario to be simulated.
- **Process level:** OPNET™ processes are finite state machines that execute a list of instructions when they are invoked by interruptions of the OPNET™ kernel.

A detailed description of the node and process levels is carried out in Appendix A.

Figure 5.1 shows the screenshot of the UTRA-TDD network model simulator. In this figure all the nodes developed in this simulator are represented: User Equipment, Base Station and RNC. These nodes have been developed to implement the following required functions:

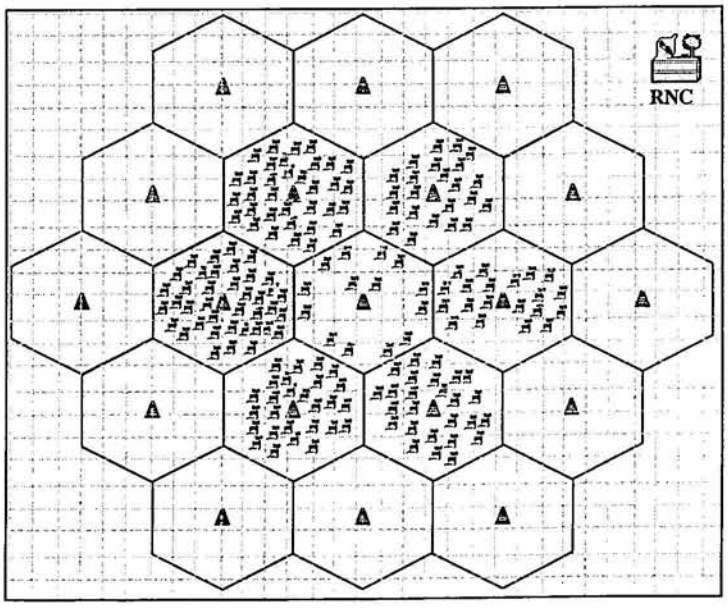

Figure 5.1 Screenshot of UTRA-TDD Simulator

- **RNC node:** It simulates the behaviour of the Radio Network Controller (RNC) and deals, in particular, with the RRM strategies.
- **BS node:** It represents a Base Station.

- **UE node:** It simulates the behaviour of a User Equipment in terms of mobility, traffic generation and radio transmission functions.

The strategy used for the implementation of the UTRA-TDD simulator is based on the fact that all the computations required by the RRM algorithms are performed on the RNC node. This strategy has been adopted in order to simplify the implementation of the remaining nodes, namely the User Equipment and the Base Station. There is no lack of generality in this approach because, thanks to the OPNET™ simulator, the RNC node has access to all the required variables to compute the output of the RRM algorithms. For example:

- Power control is carried out with knowledge of the position of the UEs, which the RNC node knows by reading their x and y coordinates;
- UTRA-TDD handover is also based on the position of the UEs, which is known as just described;
- Interference evaluation can also be computed at the RNC for up and downlink connections because the RNC knows the SF, path loss and E_b/N_0 target for all the received packets in a frame;
- And finally, the DCA algorithm decides the channel allocations for uplink and downlink packets according to the maximum allowed TF for each connection, which is known at least one frame in advance. Moreover, the downlink packets are buffered at the RNC before their transmission to the destination is simulated, according to the DCA allocations.

This means that, while there is a real need to transmit the uplink data packets, because the RNC cannot predict the TF used by each UE, the transmission of the downlink data packets is not necessary for any of the results and statistics to be obtained from this simulator. In this way, in order to simplify even more the implementation of the remaining nodes, the downlink packets are discarded after being processed by the RNC, instead of being sent to the UE nodes.

In OPNET™, modelling the communication between the UE nodes and a BS as a single radio link produces collisions among overlapping packets. One way of solving this problem (which would result in packets being discarded) would be to create as many radio links as the number of simultaneous transmissions or, in alternative, to build more complex OPNET™ models. However, there is a simple way of avoiding the problem, which consists in using zero-sized packets and carrying the information required by the RNC node in a header field associated with the packet; thus, the packets are only used to signal events to the RNC (as explained, this is only necessary in the uplink).

In this work, it is assumed that all the non-conversational services only generate downlink traffic, upon requests initiated by the UEs (this emphasises the fact that in UTRA-TDD traffic is

asymmetric, with unbalance towards the downlink). To handle this situation the following strategy has been adopted.

The traffic generators for the unidirectional downlink traffic are placed on the UE side (that is, they simulate the generation of the downlink traffic to be handled by the RNC, as described above, and of course the corresponding load is not accounted for in the uplink direction). This has the advantage of directly relating the requests with the traffic generation and associating the traffic to each UE in a natural way.

In conversational services, a call is initiated by the user equipment and the traffic is bi-directional, which means that two flows must be generated. Generation of uplink and downlink traffic is performed by the UE node and control packets are exchanged between the calling and the called side to trigger the generation of a flow in the reverse direction.

5.2.1 User Equipment node: Functionality

The UE node simulates the behaviour of a User Equipment entity in terms of mobility, traffic generation and radio transmission functions:

- Traffic Generation: Packets are generated depending on the service to be provided to the simulated user according to a predefined traffic model. Traffic models in users' equipment nodes were implemented considering the services envisaged for 3G, which were modelled as described in [3].
- Radio transmission: Uplink packets are transmitted to the corresponding Base Station through the air interface; transmission of downlink packets is simulated by the RNC, without the actual delivery to the corresponding UE (as explained).
- MAC/RLC functions: The generated packets are kept in a buffer and transmitted with a certain Transport Format (TF) in each Transmission Time Interval (TTI). This functionality is responsible for selecting the appropriate TFs in each case and carrying out the required retransmissions (if the service allows them) for the erroneous packets.
- MAC configuration: Depending on the control messages received from the RNC node, the MAC is configured for the maximum allowed TF. This configuration is carried out either at the beginning of a new connection (i.e., after it has been accepted by Call Admission Control) or at the middle (for instance if congestion has occurred). In UTRA-TDD, MAC configuration and reconfiguration may be due to DCA decisions.
- Session management functions: They are responsible for initiating the admission procedure at the beginning of a new connection and the release procedure at the end, depending on the behaviour of the traffic generators.

- Mobility functions: Each UE follows a trajectory specified when a simulation scenario is defined.

5.2.2 Base Station node: Functionality

This node simulates the essential behaviour of a Base Station. It is connected on one side to the RNC node and on the other to the radio interface. Its function is the reception of uplink data and control packets from the UE nodes and delivery to the RNC node for processing.

For simplicity and efficiency in the simulator design, there are some functions of the Base Station that are simulated in the RNC node. The aspects related with interference and E_b/N_0 evaluation are simulated by the RNC after reception of the packets transmitted to the base stations in the system by all the users. It is possible to carry out this processing at the RNC where the packets from all the users that have been simultaneously transmitted are available.

5.2.3 RNC node: Functionality

This node simulates a set of functions related with the RRM algorithms:

- Admission Control and Congestion Control: Algorithms to decide whether new sessions can be accepted or not and for triggering the corresponding algorithms to control the congestion situation.
- Handover algorithm: different base stations receive different signal strengths from a certain UE. The BS that receives the strongest signal is instructed to listen to that UE.
- Management of downlink traffic: The downlink packets are kept in buffers for the different users; according to the strategy just described, downlink packets are not delivered to the users. The selection of the TF for carrying out downlink traffic is carried out in this node by executing appropriate scheduling algorithms.
- Outer loop power control: Calculation of the E_b/N_0 target for each transmission.
- Reception of uplink radio transmissions: This node computes the measured E_b/N_0 for each transmission depending on the simultaneous transmissions in a certain frame and timeslot.
- Measurements: This node computes the required measurements to carry out the RRM algorithms. These measurements are E_b/N_0 for each transmission, inter-cell interference and path loss. Although some of these measurements are carried out in the UE or in the BS of the real system, to reduce the simulator complexity and the amount of information exchanged between nodes, the simulator computes them in the RNC node, where they are processed and used by the RRM algorithms.

- Session management functions: This node handles the establishment / release of new sessions when requested by the uplink and downlink traffic generators.
- DCA (Dynamic Channel Allocation): In the UTRA-TDD mode the DCA algorithm is of outmost importance. Two types of DCA are carried out in the RNC: the slow and fast DCA. On real systems, fast DCA is performed by the base stations. However, since it is based on a cell-related preference list computed by the slow DCA in the RNC, it was decided to place it on the RNC to simplify the simulator. In this way, the amount of data exchanged between the RNC and the BS can be highly reduced.

Synchronization of the UTRA-TDD simulator is achieved by asking the kernel to send an interrupt (a regular interrupt) to all nodes every 10 ms. This approach has the advantage of relieving the RNC of the burden of having to check the list of admitted users every 10 ms but, on the other hand, invokes users that may be idle. These users have to check if they are allowed to transmit and, in the negative case, just go back idle.

5.3 Analytical model

In this section, the behaviour of uplink, downlink and crossed timeslots is described by means of an innovative analytical model as presented in [4]. The basic assumption is that intra-cell interference is negligible, due to the use of joint detection techniques, which is feasible in UTRA-TDD according to the discussion in section 4.3. With this simplification it is possible to put in evidence the major factors that contribute to interference in each of the three cases under analysis and therefore the model provides a useful framework for optimizing the DCA algorithms.

5.3.1 Uplink Timeslots

We start by considering the basic interference model as well as the notation that will be used in the following analysis. Let us consider a particular UE transmitting on an UL timeslot. P_i is the power received at the BS, I is the total interference at the BS (inter-cell only, as assumed) and N is the thermal noise power at the BS.

The condition to meet is given by

$$\frac{P_i \times SF_i}{N+I} \geq r_i \left(\frac{E_b}{N_0} \right)_i \tag{5.1}$$

Since

$$SIR_i = \frac{r_i}{SF_i} \times \left(\frac{E_b}{N_0} \right)_i \tag{5.2}$$

The minimum value of P_i that must be guaranteed is

$$P_i = (N+I) \times SIR_i \tag{5.3}$$

We now consider a given timeslot allocated to various UE in a number of interfering cells. The following notation will be used:

- P_{ij} – Received power at BS_j due to UE_{ij} (station i in cell j)
- P_{ij}^* – Power transmitted by UE_{ij}
- $I_{ij,k}$ – Interference caused by UE_{ij} in BS_k
- $I_{j,k}$ – Interference caused by cell j in BS_k

$$I_{j,k} = \sum_i I_{ij,k} \tag{5.4}$$

- I_k – Total interference caused by the other cells in BS_k

$$I_k = \sum_j I_{j,k} \tag{5.5}$$

- $(P_{ij})_0$ – Value of P_{ij} assuming $I_j = 0$
- $(I_{ij,k})_0$ – Component of $I_{ij,k}$ due to $(P_{ij})_0$

Considering the attenuations between each UE and the base stations (on the own cell and on the other cells), we may write:

$$P_{ij}^* = \alpha_{ij,j} P_{ij} = \alpha_{ij,k} I_{ij,k} \qquad k \neq j \tag{5.6}$$

To simplify the notation we shall consider initially only two cells (1 and 2). For cell 1 the following relations hold:

$$\begin{aligned} P_{i1} &= (N + I_1) \times SIR_{i1} \\ (P_{i1})_0 &= N \times SIR_{i1} \\ \frac{P_{i1}}{(P_{i1})_0} &= \frac{(N + I_1)}{N} \end{aligned} \tag{5.7}$$

Considering the power transmitted by a UE, it follows that:

$$\frac{P_{i1}^*}{(P_{i1}^*)_0} = \frac{P_{i1}}{(P_{i1})_0} = \frac{I_{i1,2}}{(I_{i1,2})_0} = \frac{N + I_1}{N} \tag{5.8}$$

Therefore:

$$\begin{aligned} I_{i1,2} &= (I_{i1,2})_0 \times \frac{N + I_1}{N} = (I_{i1,2})_0 + \frac{(I_{i1,2})_0}{N} \times I_1 \\ I_{1,2} = I_2 &= \sum_i (I_{i1,2})_0 + \frac{\sum_i (I_{i1,2})_0}{N} \times I_1 \end{aligned} \tag{5.9}$$

Since we are considering only two cells, the complete set of equations for this case is:

$$\begin{aligned} I_1 &= \sum_j \left(I_{j2,1}\right)_0 + \frac{\sum_j \left(I_{j2,1}\right)_0}{N} \times I_2 = \left(I_{2,1}\right)_0 + \frac{\left(I_{2,1}\right)_0}{N} \times I_2 \\ I_2 &= \sum_i \left(I_{i1,2}\right)_0 + \frac{\sum_i \left(I_{i1,2}\right)_0}{N} \times I_1 = \left(I_{1,2}\right)_0 + \frac{\left(I_{1,2}\right)_0}{N} \times I_1 \end{aligned} \tag{5.10}$$

However this can be easily extended to any number of cells; for example, the equation for I_1 would be:

$$I_1 = \left(I_{2,1}\right)_0 + \left(I_{3,1}\right)_0 + \left(I_{4,1}\right)_0 + ... + \frac{\left(I_{2,1}\right)_0}{N} \times I_2 + \frac{\left(I_{3,1}\right)_0}{N} \times I_3 + \frac{\left(I_{4,1}\right)_0}{N} \times I_4 + ... \tag{5.11}$$

The sum of the first terms is simply $(I_1)_0$ and the remaining ones include additional interference components due to the other cells, with coefficients related with the power required to overcome the effect of the thermal noise.

The above equations for two cells can be rewritten in different ways, considering some additional relations. For example:

$$\begin{aligned} \left(I_{i1,2}\right)_0 &= \frac{\alpha_{i1,1}}{\alpha_{i1,2}} \times N \times SIR_{i1} \\ \frac{\left(I_{i1,2}\right)_0}{N} &= \frac{\alpha_{i1,1}}{\alpha_{i1,2}} \times SIR_{i1} \end{aligned} \tag{5.12}$$

and similar relations would apply for the other cell. Then

$$\begin{aligned} I_1 &= \left(I_{2,1}\right)_0 + \sum_j \frac{\alpha_{j2,2}}{\alpha_{j2,1}} \times SIR_{j2} \times I_2 = \left(I_{2,1}\right)_0 + \sum_j \frac{\left(P^*_{j2}\right)_0}{N \times \alpha_{j2,1}} \times I_2 \\ I_2 &= \left(I_{1,2}\right)_0 + \sum_i \frac{\alpha_{i1,1}}{\alpha_{i1,2}} \times SIR_{i1} \times I_1 = \left(I_{2,1}\right)_0 + \sum_i \frac{\left(P^*_{i1}\right)_0}{N \times \alpha_{i1,2}} \times I_1 \end{aligned} \tag{5.13}$$

The main conclusion of this analysis is that it is possible, for each timeslot, to write (and solve) a set of linear equations, whose variables are the interferences on each cell. Then it is straightforward to obtain, for each UE, the corresponding power received by its BS and the transmitted power.

It is possible to dynamically allocate timeslots to UE in different cells, so that the most favourable combinations from the point of view of interference and transmitted power are achieved. Feasible allocations can be obtained by a careful analysis of the contribution of each UE to the interference on adjacent cells (related with the coefficients of the equations).

5.3.2 Downlink Timeslots

A similar analysis can be carried out for DL timeslots. In this case the set of linear equations relates the total power transmitted by the base stations. The notation must now be adapted to this case:

- P_{ij}^* – Power transmitted by BS_j to UE_{ij} (station i in cell j)
- P_j^* – Total power transmitted by BS_j

$$P_{ij}^* = \sum_i P_{ij}^* \tag{5.14}$$

- P_{ij} – Received power at UE_{ij}
- $I_{ij,kl}$ – Interference caused to UE_{kl} due to P_{ij}^*
- $I_{j,kl}$ – Interference caused to UE_{kl} by BS_j

$$I_{j,kl} = \sum_i I_{ij,kl} \tag{5.15}$$

- I_{kl} – Total interference caused to UE_{kl} by the other cells

$$I_{kl} = \sum_j I_{j,kl} \tag{5.16}$$

- $(P_{ij})_0$ – Value of P_{ij} assuming $I_{ij} = 0$
- $(I_{ij,kl})_0$ – Component of $I_{ij,kl}$ due to $(P_{ij})_0$

Considering the attenuation from a base station to users' equipment on the same cell and on adjacent cells, the following relations hold:

$$\begin{aligned} P_{ij}^* &= \alpha_{j,ij} P_{ij} = \alpha_{j,kl} I_{ij,kl} \\ P_j^* &= \sum_i \alpha_{j,kl} I_{ij,kl} = \alpha_{j,kl} I_{j,kl} \end{aligned} \tag{5.17}$$

To simplify the analysis we consider again initially only two cells (1 and 2). The basic relations are, in this case:

$$\begin{aligned} P_{i1} &= (N + I_{2,i1}) \times SIR_{i1} \\ (P_{i1})_0 &= N \times SIR_{i1} \end{aligned} \tag{5.18}$$

Then

$$P_1^* = \sum_i P_{i1}^* = \sum_i \alpha_{1,i1} P_{i1} = \sum_i \alpha_{1,i1} (P_{i1})_0 + \sum_i \alpha_{1,i1} \times I_{2,i1} \times SIR_{i1} \tag{5.19}$$

Since

$$I_{2,i1} = \frac{P_2^*}{\alpha_{2,i1}} \tag{5.20}$$

the above equation can be rewritten as

$$P_1^* = \sum_i \alpha_{1,i1}(P_{i1})_0 + \sum_i \alpha_{1,i1} \times I_{2,i1} \times SIR_{i1} = \sum_i \alpha_{1,i1}(P_{i1})_0 + \sum_i \frac{\alpha_{1,i1}}{\alpha_{2,i1}} \times SIR_{i1} \times P_2^* \tag{5.21}$$

and therefore, considering both cells

$$\begin{aligned} P_1^* &= (P_1^*)_0 + \sum_i \frac{\alpha_{1,i1}}{\alpha_{2,i1}} \times SIR_{i1} \times P_2^* = (P_1^*)_0 + \sum_i \frac{(P_{i1}^*)_0}{N \times \alpha_{2,i1}} \times P_2^* \\ P_2^* &= (P_2^*)_0 + \sum_j \frac{\alpha_{2,j2}}{\alpha_{1,j2}} \times SIR_{j2} \times P_1^* = (P_2^*)_0 + \sum_j \frac{(P_{j2}^*)_0}{N \times \alpha_{1,j2}} \times P_1^* \end{aligned} \tag{5.22}$$

One can compare these equations with those obtained for the uplink; similar coefficients appear in both sets of equations, but their positions are changed (notice that, for example, $\alpha_{1,i1}$ and $\alpha_{i1,1}$ are the gains for the same path but in opposite directions).

Once P_j* is computed, it is possible to obtain $I_{j,kl}$, then P_{kl} and finally P_{kl}*.

5.3.3 Crossed Timeslots

It is also possible to write a system of linear equations for a crossed timeslot, where the variables are the interferences on the cells where the timeslot is used uplink and the powers of the base stations on the cells where the timeslot is used downlink.

The equation for I_i includes terms on I_j with coefficients similar to those obtained in the uplink case and terms on P_k* that have as coefficient the attenuation between BS_k and BS_i.

The equation for P_k* includes terms on P_l* similar to those obtained in the downlink case and terms on I_i whose coefficients are more complex, once they include the attenuations between UE (that cause UE to UE interference), besides the attenuations between users' equipment and base stations.

The complete system of equations is not reproduced here, but the possibility of writing such a system is simply mentioned.

As can be noted, the analytical models described above are in accordance with the analysis carried out in chapter 4. All description carried out in sections 5.3.1, 5.3.2 and 5.3.3 can be derived from equation 4.3 and 4.6 and all inter-cell interferences resulting agree with the expression listed in Table 4.1.

5.4 Methodology

As pointed out before, the analytical model presented in the previous section provides a framework for optimising the DCA algorithms, which will be evaluated by simulation. The analytical model will be initially used in the case of two cells and very simple scenarios as presented in [4]. Users' equipment will be placed in particular locations (close to a base station and near the border between cells) and timeslots will be allocated to users in pre-defined ways, considering all possible combinations. Interference and power values will be calculated with the analytical model and will be compared with the corresponding values obtained by simulation. In the simulation, an iterative method is used, starting with the calculation of powers, assuming no interference value from the other cell, thus using these values to compute a first interference value, which will be then used to update the transmitted power, and so forth, until convergence is reached.

In the following evaluation scenarios we shall consider, as a reference, a service with a useful bit rate of 64 kbit/s. According to the results presented in [4], which assume the use of Turbo codes, this means that

$$r = 0.25$$
$$SF = 2$$

where r is the coding efficiency and SF the spreading factor (see section 3.4.3). Considering a typical value of (from link level simulation, see section 3.4.3)

$$\frac{E_b}{N_0} = 1.5\ dB$$

the SIR target to meet is

$$SIR = -7.53\ dB$$

This means that it is only possible to support on a single timeslot a maximum of two UEs transmitting at 64 kbit/s.

However, since some traffic is either interactive or background, the number of active sessions on a cell may be much larger than the number of transmitting stations on each frame. Handling of this traffic is, in the first place, a matter of appropriate scheduling, according to the total submitted load, the available resources and the QoS level that must be guaranteed to each flow. This is not the concern of DCA, which simply tries to provide the best allocation of timeslots to UE selected for transmission on each frame. However, if DCA were not able to provide an acceptable allocation, it might be necessary to reschedule transmissions on the current frame, under the QoS constraints.

The number of UEs that transmit traffic on each cell during a frame is small (two per timeslot, according to the values considered in this analysis). Thus, it is possible to start by considering some simple scenarios that put in evidence the main factors that contribute to inter-cell interference, and

therefore influence the power required for transmission. This information will be useful when considering more complex scenarios.

5.4.1 Scenarios definition

The simplest scenario to be analysed considers only two cells and two timeslots per cell and therefore four UEs on each cell (with a target allocation of two UEs per timeslot, per cell). In each cell two UEs are located close to the BS and the other two close to the border between the adjacent cells. The location of the UEs in one cell is mirrored in the other cell. Once one timeslot is allocated to two UEs in one cell, the allocation of the other timeslot is implicit. The goal is to determine the best joint allocation of timeslots in both cells. For one timeslot, there are nine possible ways of combining two UEs on each cell; however, when considering the overall allocation on the two timeslots, this number reduces to six scenarios in the case of UL or DL timeslots, due to symmetry. These six scenarios are represented in Figure 5.2; the three remaining scenarios (seven, eight and nine), only meaningful when considering crossed timeslots, are the reversal of scenarios one, two and four, respectively.

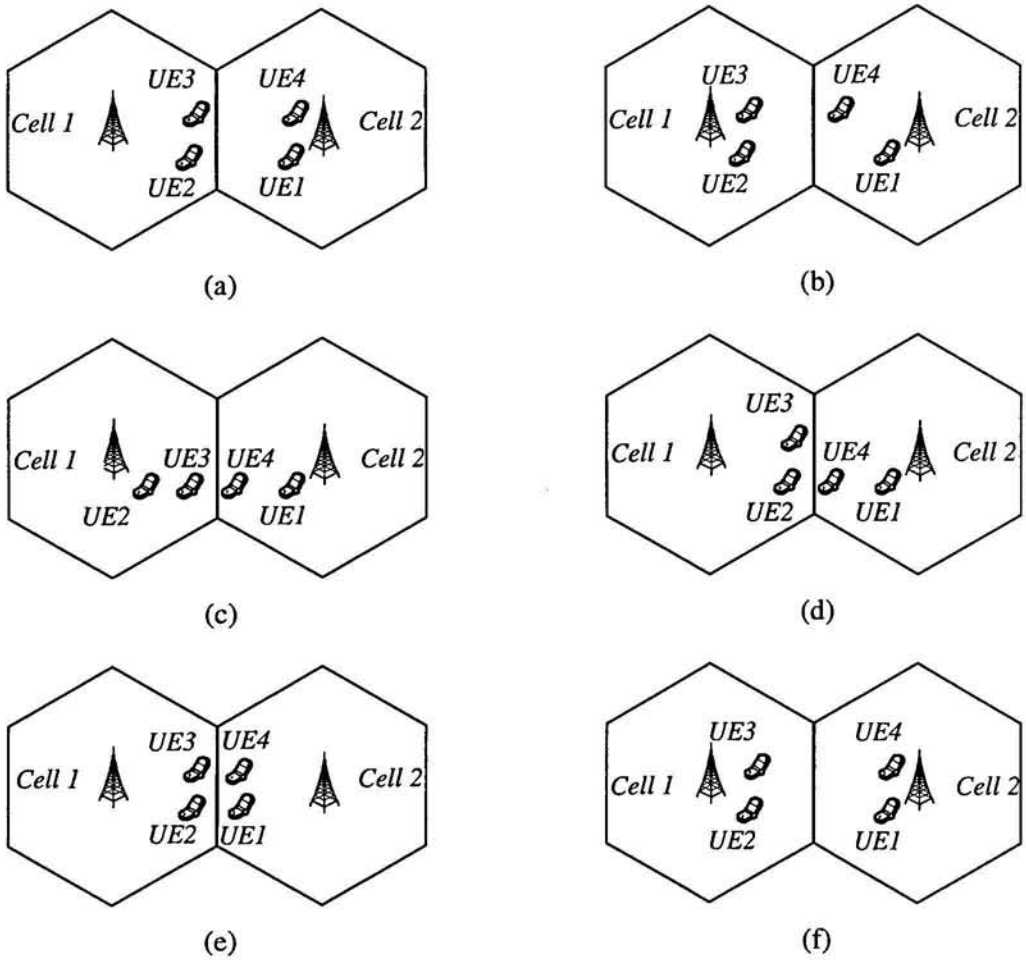

Figure 5.2 - Scenarios definition. (a) Scenario 1; (b) Scenario 2; (c) Scenario 3; (d) Scenario 4; (e) Scenario 5; (f) Scenario 6

For UL or DL timeslots, the most favourable situation, when considering a single timeslot, is to allocate it to users close to the BS on each cell; but this means that the other timeslot is allocated to users' equipment close to the border between cells, which is the worst situation (scenarios 6 and 5, respectively).

It is straightforward to conclude that the best joint solution would be to combine on one timeslot users' equipment close to the BS in one cell with users' equipment close to the cell border on the other cell (scenario 1). However, this is only a qualitative conclusion. How much is the gain (and how is it evaluated)? And what are the trade-offs?

Let us consider a UE near the cell border. Even if there were no interference from the adjacent cell, this UE would have a higher probability of outage than other stations, only due to its location. How much would inter-cell interference aggravate this risk? What would be the dominant effect? Moreover, such a UE would have a higher contribution to the interference on the adjacent cell due to two related reasons – it transmits with a higher power to its BS (larger distance) and the attenuation towards the adjacent BS is lower (smaller distance) compared to another UE closer to its BS.

To obtain quantitative results, the above scenarios were considered and all possible combined allocations were simulated. Results from the simulation were compared with those derived from the analytical model and they perfectly matched. In the simulation an iterative method was used, starting with the calculation of powers, assuming no interference from the other cell, thus using these values to compute a first interference value, which was then used to update the transmitted power, and so forth.

5.4.1.1 Uplink Timeslot Allocations

For the UL transmission, the propagation model proposed in [5] was adopted, and therefore the attenuation is given by

$$L(d) = 128.1 + 37.6 \log(d(km)) + 10dB \tag{5.23}$$

The value of N was set at

$$N = -103.2\ dBm$$

and therefore, for SIR = -7.53 dB

$$(P_{ij})_0 = -110.731\ dB$$

The cell radius was set equal to 0.600 km and users' equipment were located at two distances from their BS:

- $d_1 = 0.162\ km$ (close to the BS), with an attenuation of 108.421 *dB* to its BS and 139.426 *dB* to the other BS.
- $d_2 = 0.543\ km$ (close to the cell border), with attenuation 128.137 *dB* to its BS and 131.835 *dB* to the other BS.

The required transmitted power, assuming no interference from the other cell, is –2.31 *dBm* and 17.406 *dBm*, respectively. These are the values to be compared with the transmitted powers, for the various allocations, once the mutual interference between cells is considered.

In Appendix B the tables of the relevant values for the six allocation combinations within one timeslot in both cells are shown. Users' equipment 2 and 3 (UE2 and UE3) are located in cell 1 and users' equipment 1 and 4 (UE1 and UE4) are located in cell 2.

In scenario 6 (UEs close to their BSs in both cells), the increase in transmitted power, due to interference, is negligible; the power transmitted by each UE is only 0.59 *mW*.

In scenario 5 (UEs close to the cell border in both cells), the power transmitted by each UEs increases from 55.03 *mW* (17.406 *dBm*) to 64.79 *mW* (18.115 *dBm*), that is, an increase of 18%. This means that the power transmitted by such a UE is most influenced by its location and less by the interference from the other cell, even for the worst interference case.

In scenario 3 (one timeslot is allocated to UEs close to the BS in one cell and to UEs near the border in the other cell), the power transmitted by an UE close to the BS increases from 0.59 *mW* (-2.31 *dBm*) to 0.635 *mW* (-1.969 *dBm*), an increase of 8%, and the power transmitted by an UE close to the cell border increases from 55.03 *mW* (17.406 *dBm*) to 59.52 *mW* (17.747 *dBm*), an increase of 8%, as well.

This allocation provides a marginal gain, over the previous one, for an UE closer to the border, which is in a higher risk of outage, at the expenses of an UE closer to the BS, which is transmitting with a very low power. Hence, this is a favourable trade-off. Gains can be more evident when considering more than two cells and higher values of *SIR*.

An additional comparison can be made by considering the combined allocations in two timeslots.

One case corresponds to timeslot allocations according to scenarios 5 and 6; the total power transmitted by the eight UE is 261.5 *mW*. The other case corresponds to identical timeslot allocations according to scenario 3; the total power transmitted by the eight UE is 240.6 *mW*, that is, 92% of the former. This is another way of putting in evidence the overall gain.

The case of two adjacent cells is very particular. It is therefore necessary to investigate whether a similar method could be applied to a bunch of cells, possibly with some adaptations. For this purpose, a pattern of hexagonal cells is assumed. For such a pattern, the most critical interference

pattern occurs for users' equipment located in a region that includes the vertex common to three cells.

To handle this situation we consider an extension of the reuse partitioning method such as described in section 4.5.1.4 and in [6]. In the case of three interfering cells, each cell is divided in three concentric regions (A, B and C) separated by circumferences of radius r_1 and r_2 ($r_1 < r_2 < r_3$, being r_3 the coverage of the cell).

The method requires that timeslots should be allocated to users' equipment in the three cells in different orders to maximize the probability that a timeslot is allocated to users located in different regions in these cells. Considering that in one cell the timeslots are allocated to users' equipment in the order (A, B, C), the allocations in the other two cells should be based on permutations of this pattern, that is, (B, C, A) and (C, A, B).

As an example, the first UL timeslot would be allocated to users' equipment respectively in regions A, B and C in the three cells (and the remaining timeslots would be allocated in each cell according to its specific permutation).

This pattern could be repeated for a larger number of cells. We may start by considering one cell surrounded by six cells. If the centre cell follows permutation (A, B, C), the surrounding cells will follow the other two permutation in an alternate way. The permutations in the next outer layer of cells will be automatically determined by repetition of the basic pattern for three cells.

Of course, the number and distribution of UEs in each cell will affect the overall success of the method, but this is only the starting point for allocation, which could be improved with further adaptations, such as described in [6][7].

5.4.1.2 Downlink timeslot allocations

For the DL transmission the propagation model is similar to the one adopted for the UL, and therefore the attenuation is given by [5]

$$L(d) = 128.1 + 37.6\log(d(km)) + 10dB \tag{5.24}$$

The value of N was set at [5]

$$N = -99\ dBm$$

and therefore, for SIR = -7.53 dB

$$(P_{ij})_0 = -106.53\ dB$$

The users' equipment were located at two distances from the BS (slightly different from the UL case):



- $d_1 = 0.193$ *km* (close to the BS), with attenuation 111.272 *dB* to its BS and 131.439 *dB* to the other BS.
- $d_2 = 0.553$ *km* (close to the cell border), with attenuation 128.436 *dB* to its BS and 138.785 *dB* to the other BS.

Therefore, the required transmitted power to an UE close to the BS and to a UE close to the cell border is 4.741 *dBm* and 21.906 *dBm*, respectively, assuming no interference from the other cell.

In Appendix B the tables of the relevant values for the six allocation combinations within one timeslot in both cells are shown. Users' equipment 2 and 3 (UE2 and UE3) are located in cell 1 and users' equipment 1 and 4 (UE1 and UE4) are located in cell 2.

The relative results obtained for the DL are similar to those reported for the UL, except that power and interference values are different, due to the different values for *N*, the attenuation model and the distances from mobiles stations to the base stations.

In scenario 6, the initial (no interference) and the final values of the power are similar; the power transmitted by the BS to each UE is 2.98 *mW* (4.74 *dBm*) and the total power is 5.96 mW (7.75 *dBm*).

In scenario 5, the power transmitted by the BS to each UE must increase from 155.06 *mW* (21.906 *dBm*), for a no interference condition, to 310.12 *mW* (22.751 *dBm*), that is, an increase of 22%. The total power is therefore 376.73 *mW* (25.761 *dBm*).

In scenario 3, the power transmitted to the UE close to the BS must be increased from 2.98 *mW* (4.74 *dBm*) to 3.03 *mW* (4.82 *dBm*), an increase of 2%. For the UE close to the cell border, it must increase from 155.06 *mW* (21.906 *dBm*) to 170.415 *mW* (22.315 *dBm*), an increase of 10%. The total power is 173.448 *mW* (22.392 *dBm*).

We may again compare the combined allocations for two timeslots. In the first case (combination of scenarios 5 and 6) the total power transmitted by the base stations is 377.32 *mW*, while for the second case (scenario 3 in both cells) the total power is 346.896 *mW*, that is, 92% of the former value.

The conclusion is that a similar algorithm as for the UL (for two or more cells) should be used. Moreover, according to the above results, the powers required by the BS are well below the allowed maximum (43 *dBm*), which means that in the DL there is a very large power margin and therefore DCA allocations are less critical. This is an aspect that could possibly be exploited when considering the allocation in crossed timeslots.

5.4.1.3 Crossed timeslot allocations

Although the analysis of crossed timeslots is much more complex, there is a very clear distinction between the allocations that are not at all feasible, and those that are feasible and for which some optimisation is possible.

In the simulation, and according to the figures that represent the various allocation scenarios, we shall consider the left cell used for DL transmission, and the right cell for UL transmission.

The propagation model used for the calculus of UE to UE interference is the same as the one used for UL transmission except for the slow fading and, therefore the attenuation is given by [6][8]

$$L(d) = 128.1 + 37.6\log(d(km)) + 12dB \tag{5.25}$$

The propagation model used for the calculus of BS to BS interference is the free space model and it is accordance with [5]

$$L(d) = 38.25 + 20\log(d(m)) + 12dB \tag{5.26}$$

This introduces a much lower attenuation than the model used in [9], which is the same as for the DL case. This means that the results that will be discussed could be improved for higher attenuation between BS.

All allocation scenarios that combine at least one UE near the cell border in each of the adjacent cells are clearly not feasible, as concluded by means of simulation (these are scenarios 3, 4, 5 and 9; scenario 9 is the reversal of scenario 4, but is now meaningful since a timeslot is not used in the same direction, in the adjacent cells). These scenarios will not be further discussed.

In the remaining scenarios a timeslot is allocated to two UE close to their BS at least in one of the two cells (UL or DL).

In Appendix B the tables of the relevant values for these five allocation combinations (scenarios 1, 2, 6, 7 and 8) within one timeslot in both cells are presented.

By analysing these five scenarios, three different cases arise. All have in common the fact that the transmission power of the BS (DL cell) is almost not affected by the UE to UE interference, due to the UE transmitting in the UL cell (direction). However the influence of the BS transmission varies according to the cases.

The most favourable case is of course scenario 6: the same timeslot is allocated to users' equipment close to their BS in both cells. The BS power (DL cell) is almost not affected by the UE in the UL cell, while the power transmitted by these UEs increases 2.59 *dB*, from 0.54 *dBm* (no interference) to 3.13 *dBm*, well below the outage condition.

In scenarios 2 and 7[19], both users' equipment in the DL cell are close to their BS, while in the UL cell one and two users are located close to the cell border, respectively. The power increase in the BS is low (0.4 *dB* and 0.9 *dB*, respectively), while the power increase in the UE is in the order of 2.8 *dB*. This means that the UE near the cell border (one or two according to the case) are near an outage condition (20.5 *dBm* in scenario 2 and 20.7 *dBm* in scenario 7). This condition will likely occur if more than one DL cell interferes with the UL cell. A higher attenuation between BSs will reduce this risk, which is nevertheless mainly due to the location of the users' equipment far from their BS and less to the interference.

Finally, in scenarios 8 and 1, both users' equipment in the UL cell are close to their BS, while in the DL cell one and two users are located close to the cell border, respectively. In this case, in spite of being close to their BS, the users in the UL must increase their power by 13.8 *dB* and 16.8 *dB*, respectively, that is, taking into account the BS to BS interference, the powers must be 14.3 *dBm* and 17.3 *dBm*. The interference from two or more DL cells will certainly produce an outage condition on these stations, as in the previous cases (although due to different reasons).

5.5 Concluding Remarks

According to the previous analysis, the main conclusion is that a DCA algorithm should in the first place try to allocate crossed timeslots to users close to their BS, both in DL and UL cells. The fact that scenarios like 2/7 and 1/8 are promising, as far as feasibility is concerned, means that the allocation of crossed timeslots to UE in intermediate locations within a cell is in many cases possible and should be the next attempts by the DCA algorithm.

The previous analysis, based on simulation results, allows combining a strategy for all types of timeslots (when considering just two interfering cells).

Let us consider two cells, with the following partition between UL and DL timeslots:

- In cell 1, timeslots 0 up to N_1 are used UL
- In cell 2, timeslots 0 up to N_2 are used UL (with $N_2 < N_1$)

This means that the partitions $[0...N_2]$, $[N_2+1...N_1]$ and $[N_1+1...14]$ are used for UL, UL/DL (crossed) and DL timeslots, respectively.

The allocation must start with the crossed timeslots. Timeslot N1 in cell 1 must be allocated to users close to the BS; we may then continue by allocating UL timeslots with lower numbers (down to 0) to UEs far away from the BS. This implies that in cell 2, UL timeslots $[0...N_2]$ must be allocated in the reverse order (starting with users close to the BS). Timeslot N_2+1 in cell 2 must be allocated to users close the BS; we may then continue by allocating DL timeslots with higher

[19] Recalling that there are nine possible scenarios and scenarios seven, eight and nine are reversal of scenarios one, two and four

numbers (up to 14) to users far away from the BS. This implies that in cell 1, DL timeslots [N_1+1...14] are allocated in the reverse order (starting with users close to the border).

This is just an example. In fact since the partitions are independent, after allocating the crossed timeslots, the previous example allocations in the UL and DL partitions may just be reversed in both cells.

The extension to three or more cells, when considering the crossed timeslots, could be based on the same method previously described for the UL timeslots. However, the number of DL timeslots interfering with UL timeslots is critical and therefore the method requires that, as a first step, crossed timeslots are allocated to users in region A (and possibly in region B) and then the allocation of the remaining UL and DL timeslots follows for the other users, according to the rules described.

5.6 Chapter References

[1] OPNET Modelling concepts, Vols. I-II, OPNET Technologies Inc., 2000.

[2] Simulation kernel, Vols. I-II, OPNET Technologies Inc., 2000.

[3] ARROWS D06 Deliverable, "Conceptual Studies on Radio Resource and QoS Management Algorithms" March 2002 (available in www.arrows-ist.upc.es).

[4] ARROWS D13 Deliverable, "First Report on the Evaluation of RRM Algorithm by Simulation" July 2002 (available in www.arrows-ist.upc.es).

[5] 3GPP TR 25.942 v3.3.0 (2002-06), "RF System Scenarios"

[6] A.L.S.Castro, R.N. Castro, R.A. Castro, José Ruela, "Dynamic Channel Allocation in UTRA-TDD Systems Considering Asymmetrical Traffic", *Proceedings of the IST Mobile & Wireless Communication Summit 2003*, Vol.2, pp. 446-450, June 2003.

[7] H. Haas, S. McLaughlin, "A Dynamic Channel Assignment Algorithm for a Hybrid TDMA/CDMA-TDD Interface Using the Novel TS-Opposing Technique", *IEEE Journal on Selected Areas in Communications*, Vol. 19, No. 10, pp. 1831-1846, October 2001.

[8] A.L.S.Castro, José Ruela, "Autonomous Dynamic Resource Allocation for TDMA/CDMA-TDD Systems", *Proceedings of the 6th International Symposium on Wireless Personal Mobile Communications – WPMC'03* , Japan, October 2003.

[9] H. Holma, G. Povey, A. Toskala, "Evaluation of Interference Between Uplink and Downlink in UTRA/TDD", *Proceedings of the IEEE 50th Vehicular Technology Conference*, Vol.5, pp. 2616-2620, September 1999.

6
DCA Algorithms Based on Location

6.1 Introduction

In this chapter the DCA algorithms simulated with the OPNET tool are described in detail. According to the previous chapter, the allocation of crossed timeslots is a critical issue, since it is quite sensitive to the relative locations of users' equipment. Therefore the exploitation of crossed timeslots must take into account the relative importance of the various interference patterns on all types of timeslots.

The basic strategy is based on two simple rules: crossed timeslots should be preferably allocated to users closer to their base station and users near the border between cells should preferably use timeslots assigned to the same direction in both cells.

This lead to the proposal of using the distance between the users and their base station as the basic criterion of the DCA allocation algorithm [1]. To estimate the distance for a UE to the BS, two criteria can be used, based on Time Advance (TA) and Path Loss (PL) measurement, respectively.

It is assumed in the description that lower timeslot numbers are used for UL traffic and that a single Switching Point (SP) separates the UL and DL timeslots. Therefore crossed timeslots will be allocated in the region between the leftmost and the rightmost SP.

According to the previous rule, an initial algorithm (Algorithm 1) was specified such that the UL timeslots with lower number were allocated to users at higher distances from the base station (and the reverse for the DL). In this way, timeslots closer to the SP would be allocated only if necessary and, in such case, to users closer to the base station. However, when considering the pure UL and DL timeslots, it is not necessary to use such a strict allocation rule, that is, to follow the same allocation order in all cells. A refinement of the original algorithm, based on analytical and simulation results obtained with the simple scenarios, is then proposed and evaluated for the case of two cells (Algorithm 2). A possible extension for a larger number of cells is considered (Algorithm 3).

6.2 Algorithm 1

The algorithm starts by providing an initial ("fictitious") allocation, according to the description in chapter 5 and in [2]. This allocation allows grouping the UEs according to their relative distances to the BS. This allocation is likely to leave some timeslots unused, while other timeslots may be "allocated" to too many UE (thus exceeding their nominal capacity).

The final ("real") allocation will depend on:

- the current geographical distribution of UEs in the cell;
- the number of UEs associated to the same timeslot, after the initial allocation;
- the SF allocated to each UE.

The real allocation is explained for the UL; it will be similar for the DL, with timeslot allocation performed in a reverse order. For the UL, timeslot allocation starts with timeslot 0 (see Figure 4.6). The order of allocation is the following: UEs are sorted in ascending order of their initial timeslot number and within each group (same initial timeslot number) in ascending order of SF, that is, precedence in a group is given to UEs requiring a higher number of elementary Resource Units (RU) or multiple codes. In this way, packing will favour multicode allocation within a single timeslot.

It may happen that a UE has RUs allocated in two contiguous timeslots (multislot operation); a final (optional) reshuffling operation may try to avoid this situation. The UE may free RUs in the first timeslot and have all RUs allocated in the next timeslot; however this should be performed only if the freed RUs can be reused by another UE. Reshuffling could be applied only to adjacent timeslots.

If a critical interference threshold is reached before all RUs are allocated within a timeslot, allocation continues in the next timeslot (a reshuffling could try to allocate the unused timeslots in a more favourable condition).

If it is not possible to allocate RUs to all UEs, this means that congestion has occurred; the algorithm must be executed again, from the beginning, after calling the Congestion Control algorithm.

Figure 6.1 shows the evolution of the timeslot allocation within a frame in two cells. Users closer to the border of the cell or farther from their base station (F) are allocated in timeslots with lower numbers, while users closer to the base station (C) are allocated near the switching point (SP).

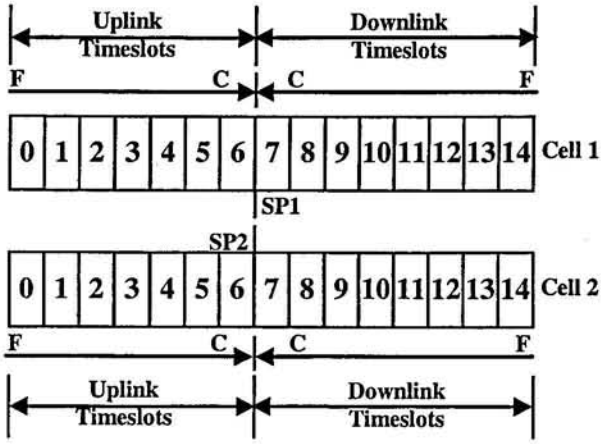

Figure 6.1 - Timeslot allocation for Algorithm 1 (common SP)

In case there are crossed timeslots, the allocation according to this algorithm will be as in Figure 6.2.

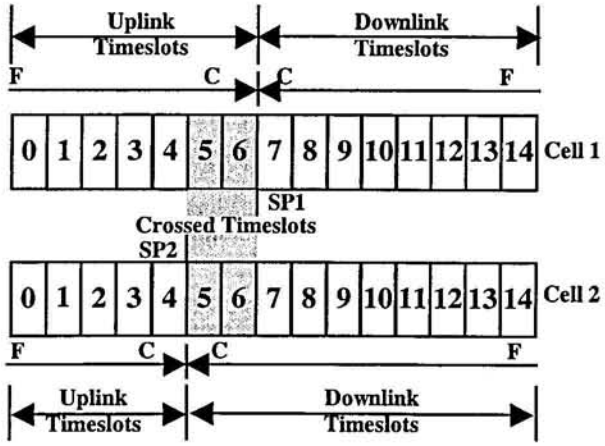

Figure 6.2 - Timeslot allocation for Algorithm 1 (crossed timeslots)

6.3 Algorithm 2

This algorithm is a modification of the first algorithm just described. The initial steps of the second algorithm are exactly the same as for the first algorithm:

- it also starts by providing an initial "fictitious" allocation;
- the "real" allocation is also dependent on:
    - the geographical distribution of the UEs;
    - the number of UEs allocated to the same timeslot, after the initial allocation;
    - the SF of each UE.

The difference is that while the allocation in one cell is not modified (for example in cell 1), the allocation on the UL or the DL timeslots is inverted in the other cell (cell 2). Moreover the rule for the allocation of crossed timeslots is the same in both algorithms.

The result is that the users that are closer to the border (F) in cell 2 are allocated closer to this cell's SP, while the users closer to the base station (C) are now allocated far away from the SP. This is exemplified in Figure 6.3.

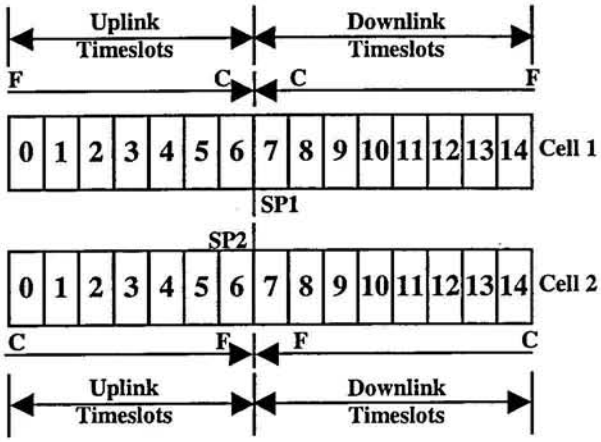

Figure 6.3 - Timeslot allocation for Algorithm 2

When there are crossed timeslots, situation is a bit more complex. Figure 6.4 shows the resulting allocation for this case.

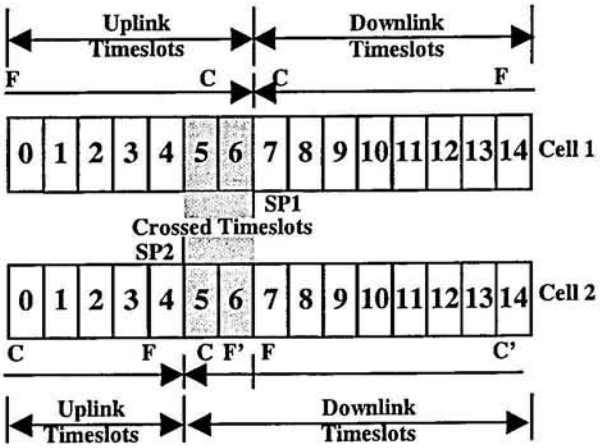

Figure 6.4 - Timeslot allocation for Algorithm 2 (crossed timeslots)

In cell 1 the allocation follows the same rule as for Algorithm 1. On the other hand, inverting the allocation in cell 2 does not affect the crossed timeslots; only the remaining timeslots (up and downlink) are inverted. In the figure, F' represents users closer to the BS than C'. It is also obvious that once crossed timeslots are allocated to users closer to the base stations, the order of allocation of UL (or DL) timeslots could follow the inverse order in both cells. In Appendix C the pseudo-code for Algorithm 1 and Algorithm 2 is presented.

6.4 Algorithm 3

The case of two adjacent cells is very particular. It is therefore necessary to investigate whether a similar method could be applied to a bunch of cells, possibly with some adaptations. For this

purpose, a pattern of hexagonal cells is assumed. In this case, the most critical interference pattern occurs for UEs located in a region that includes the vertex common to three cells. To handle this situation we consider an extension of the re-use partition method as described in section 4.5.1.4. This algorithm is only applied to pure UL and DL timeslots, since the allocation of crossed timeslots follows the basic rule. This allocation pattern may be cyclically repeated in a larger group of cells

6.5 Simulation Results

The behaviour of the DCA algorithms previously described and specified has been validated by means of system level simulations. In the simulation the cases of two cells and three cells were considered. However to put in evidence the worst case conditions as far as interference, users were randomly located in both cells, but only in a region between the base stations. Moreover, to simplify the simulation only twelve timeslots were considered for allocation in each frame. The algorithms were evaluated in two cases.

In the first scenario, both cells have similar uplink and downlink partitions and therefore there are no crossed timeslots; in this case, purely symmetrical traffic, representative of a conversational service, was generated. The service bit rate is 64 kbit/s, which according to the previous analysis requires $SF = 2$. The total number of active terminals is 12 per cell, which represents the maximum possible load (a timeslot, either UL or DL can be allocated to two unidirectional transmissions).

In the second scenario, the cells have different uplink and downlink partitions and therefore allocation of crossed timeslots is necessary. Traffic in cell 1 is as in the first case. In cell 2, two types of service were considered – conversational (symmetrical) and streaming (downlink only). The bit rate for the streaming service was set to 32 kbit/s ($SF = 4$) and therefore it is possible to allocate up to four streaming transmissions per timeslot. The number of terminals that generate conversational and streaming traffic is 6 and 24, respectively, which again represent the maximum possible load on the cell. As a result, 3 timeslots are used for UL transmission and 9 for DL transmission and therefore when considering the joint allocation of timeslots in both cells, 3 timeslots must be allocated in opposite directions (crossed timeslots). For the case of three cells, totally different partitions were configured. In cell 1 it is assumed the same traffic as before (purely conversational), with a symmetrical allocation of uplink and downlink timeslots (6 in each direction). In cell 2, the number of terminals that generate conversational and streaming was set to 8 and 10 respectively; this means that 5 timeslots are used for UL transmission and 7 for DL transmission. Finally, in cell 3, the number of terminals was set to 8 and 16 (for conversational and streaming traffic, respectively) and therefore 4 timeslots are required for UL and 8 for DL transmission.

The values used for the target Signal to Interference Ratio (SIR) were based on the relation:

$$SIR = \frac{r}{SF} \times \left(\frac{E_b}{N_0} \right) \quad (6.1)$$

where SF is the Spreading Factor, E_b/N_0 is the ratio of the energy per bit to the interference and noise power density, and r is the ratio of the total number of useful bits to the total number of bits in a Transmission Time Interval (TTI). The value $E_b/N_0 = 1.5\ dB$ was selected based on results of link layer simulation, which assumed the use of Turbo codes; for this reason r was set equal to 0.25 (which also takes into account other physical layer functions). Thus, for the conversational service, $SF = 2$ and $SIR = -7.53\ dB$, while, for the streaming service, $SF = 4$ and $SIR = -10.54\ dB$. Table 6.1 summarises the parameters used in the simulations. The propagation models adopted in the simulations correspond to a macro-cell environment and are described in [1].

BS parameters		
Cell radius	600 m	
Maximum transmitted power	43 dBm	
Thermal noise power	-99 dBm	
Shadowing deviation	10 dBm	
UE parameters		
Max. transmitted power	21 dBm	
Min. transmitted power	-44 dBm	
Thermal noise power	-103.2 dBm	
Traffic model	Conversational	Streaming
Offered bit rate	64 kbit/s	32 kbit/s
Activity factor	1	
QoS parameters		
E_b/N_0 target	1.5 dB	
	Conversational	Streaming
Transport formats	TF1 (2x640)	TF3 (4x320)
SF	2	4
Propagation model		
UE ↔ BS	$L(d) = 128.1 + 37.6 \log d(km) + 10dB$	
UE → UE	$L(d) = 128.1 + 37.6 \log d(km) + 12dB$	
BS → BS	$L(d) = 38.25 + 20 \log d(m) + 12dB$	

Table 6.1 - Simulation parameters

6.5.1 Scenario 1 (no crossed timeslots)

Figure 6.5[20] shows the scenario 1 used in the simulations. The service bit rate is 64 kbit/s, which according to the previous analysis requires $SF = 2$. The total number of active terminals is 12 per cell, which represents the maximum possible load (a timeslot, either UL or DL can be allocated to two unidirectional transmissions).

[20] It should be clear that the circles in Figure 6.5 refer to the region where the UEs are located. The radiation pattern of antennas at base station is considered omnidirectional.

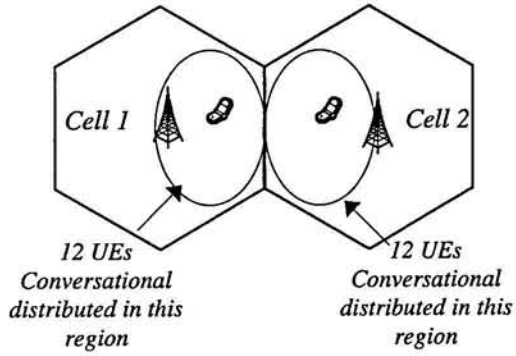

Figure 6.5 - Simulation scenario 1

The simulation results are shown in Figure 6.6 and Figure 6.7, for cell 1 and cell 2, respectively. Transmitted power by each UE (UL timeslots) and by BS (DL timeslots) is represented. Both algorithms can be directly compared. This was the initial scenario that has been analysed. The main goal was to validate the initial Algorithm 1 and to assess possible improvements introduced by Algorithm 2.

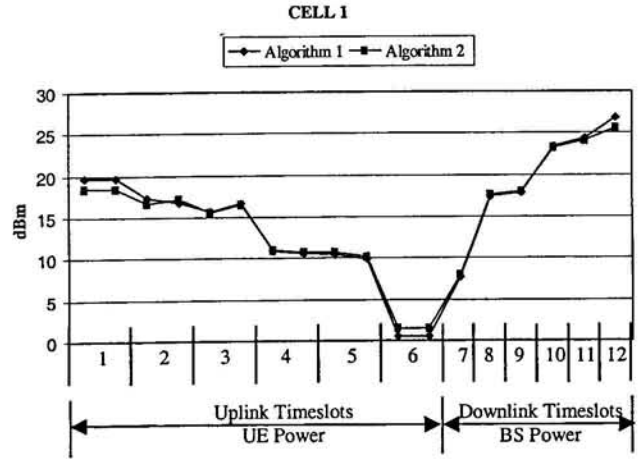

Figure 6.6 - Transmitted power per timeslot in cell 1

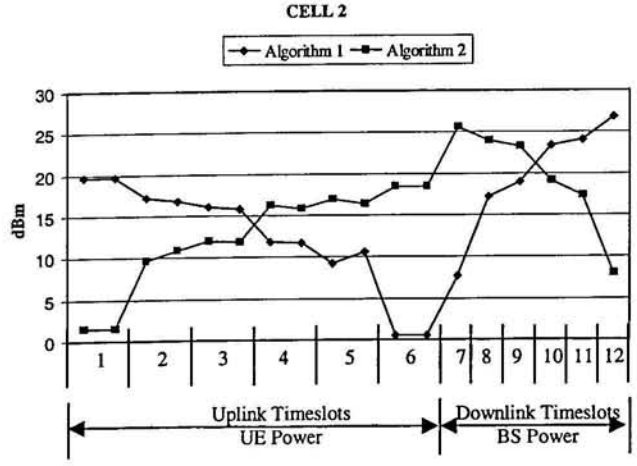

Figure 6.7 - Transmitted power per timeslot in cell 2

The results put in evidence the expected behaviour. In cell 2 the order of timeslot allocation is different in the two algorithms, which is shown by the reverse order of power variation from timeslot to timeslot. Moreover a marginal better behaviour of Algorithm 2, as predicted, is also evident in what concerns the highest transmitted powers. Explanation for this improvement was given and has been used to justify the adoption of Algorithm 2.

6.5.2 Scenario 2 (crossed timeslots)

Figure 6.8[21] shows the scenario 2 used in the simulations. The number of terminals that generate conversational and streaming traffic in cell 2 is 6 and 24, respectively, which again represent the maximum possible load on the cell. As a result, 3 timeslots are used for UL transmission and 9 for DL transmission and therefore when considering the joint allocation of timeslots in both cells, 3 timeslots must be allocated in opposite directions (crossed timeslots).

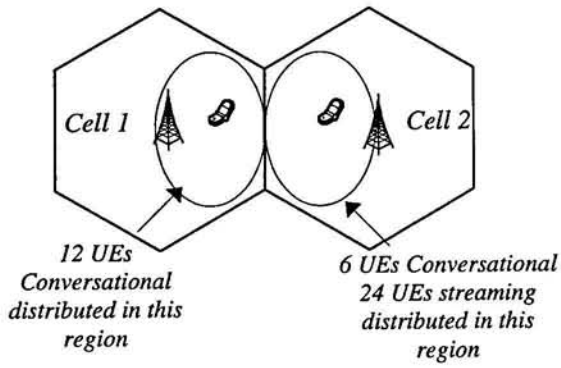

Figure 6.8 - Simulation scenario 2

The simulation results are presented in the following figures. Figure 6.9 refers to cell 1. Timeslots 1 to 6 are used for UL, but timeslots 4 to 6 are crossed timeslots. Timeslots 7 to 12 are used for DL.

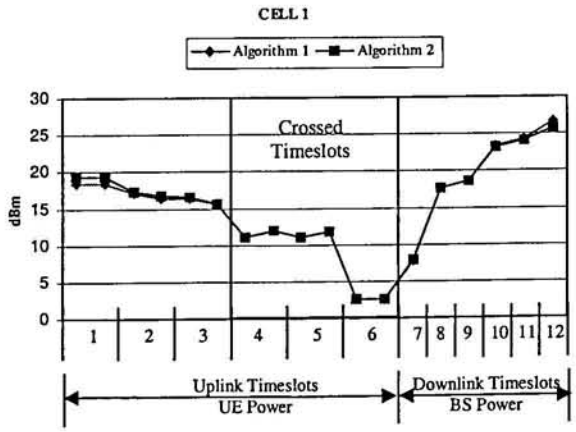

Figure 6.9 - Scenario 2 - transmitted power per timeslots in cell 1

[21] The circles refer to the region where the UEs are located and not to the radiation pattern of antennas at BS.

Figure 6.10 refers to cell 2. Timeslots 4 to 12 are used for DL, but timeslots 4 to 6 are crossed timeslots.

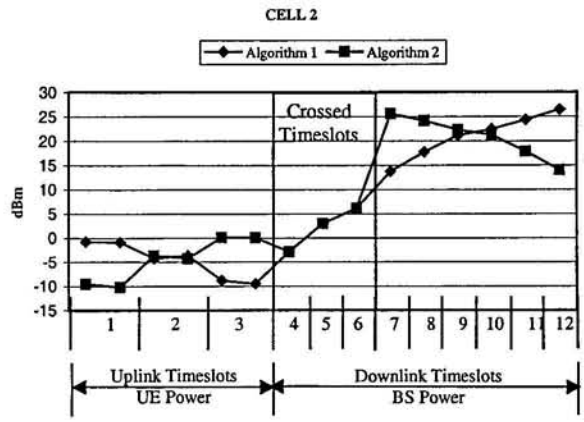

Figure 6.10 - Scenario 2 - transmitted power per timeslots in cell 2

From the analysis of the figures, it is possible to conclude that, as already mentioned, both algorithms are based on the same allocation strategy for crossed timeslots, which are the first to be allocated. Therefore, they provide the same results. The marginal advantage of Algorithm 2 over Algorithm 1 is also noticeable in the figures for the remaining timeslots. As a conclusion, the results show that the risk of outage of mobile stations near the cell border is reduced by using Algorithm 2, while the remaining stations are not penalised, since the power level rise due to a higher level of interference from those stations is small or moderate.

6.5.3 Scenario 3 – Three cells and symmetrical traffic

The configuration for this scenario is shown in Figure 6.11.

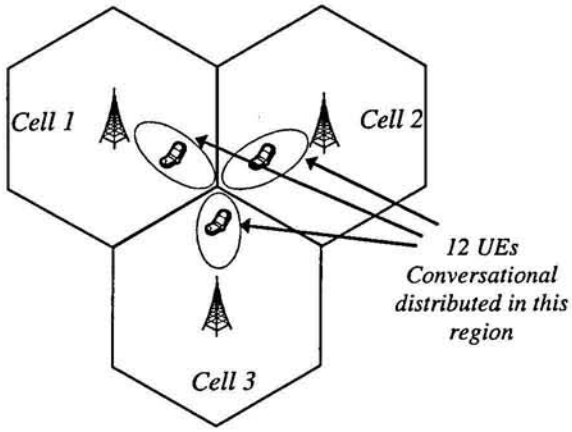

Figure 6.11 - Scenario 3 - three cells and symmetrical traffic

In this case, Algorithm 3 has been simulated in order to assess possible improvement due to a more favourable combination of timeslot allocation in three cells. Since it is no more possible to use Algorithm 2 in the same way as for two cells, the following rule was adopted in the simulations:

the allocation of slots in cells 2 and 3 followed the same order, different from the order of allocation in cell 1. The results are shown in Figure 6.12, Figure 6.13 and Figure 6.14. As expected, Algorithm 3 provides a better performance, since the risk of outage for users close to cell border is reduced, as shown by the power curves.

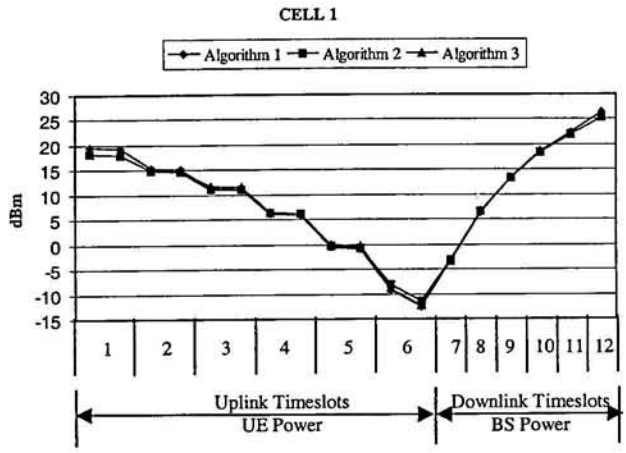

Figure 6.12 - Scenario 3 - transmitted power per timeslot in cell 1

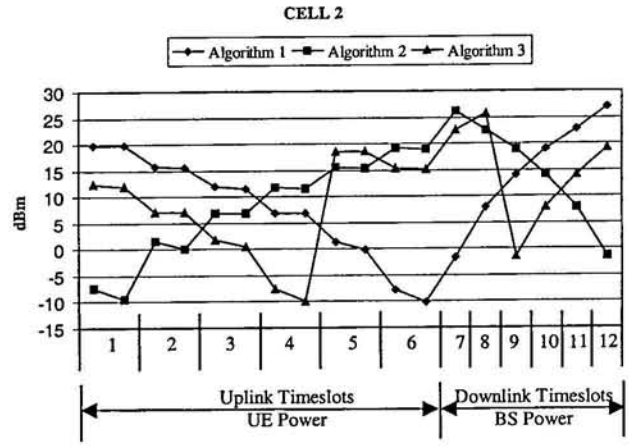

Figure 6.13 - Scenario 3 - transmitted power per timeslot in cell 2

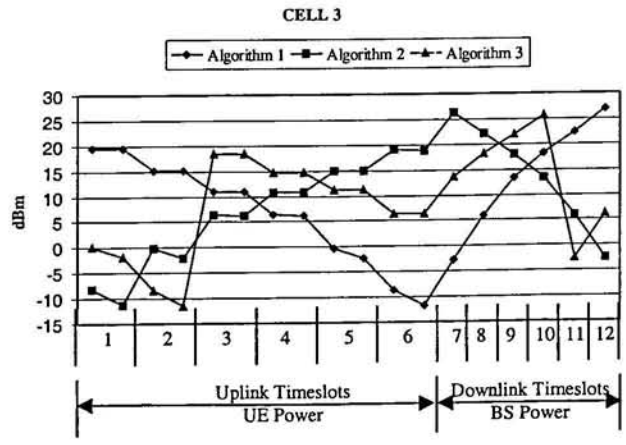

Figure 6.14 - Scenario 3 - transmitted power per timeslot in cell 3

6.5.4 Scenario 4 – Three cells and asymmetrical traffic

The configuration for this scenario is presented in Figure 6.15.

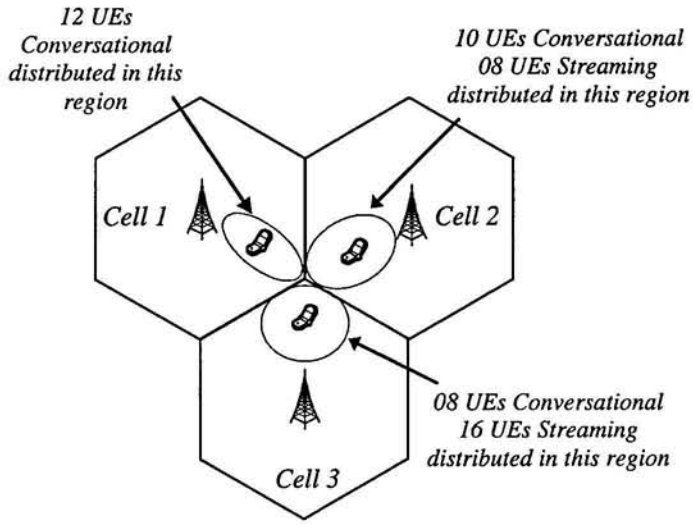

Figure 6.15 - Scenario 4 - three cells and asymmetrical traffic

In this configuration three different asymmetry patterns were created. The partition between UL and downlink timeslots is (6,6), (5,7) and (4,8) for cells 1,2 and 3, respectively. Timeslots 5 and 6 are crossed timeslots, but the direction in which they are used is different in the three cells: (UL, UL), (UL, DL) and (DL, DL), respectively.

The simulation results are shown in Figure 6.16, Figure 6.17 and Figure 6.18 Since the critical allocation concerns the crossed timeslots and the allocation rule is the same for all algorithms, only Algorithms 1 and 2 were simulated. In cell 1, there is a potential problem with timeslot 6 (used UL), since interference comes from two DL transmissions in cells 2 and 3. Although not shown in the figure, it was observed by simulation that the highest raise in transmitted power, when adding the effect of interference, occurred in that timeslot. This situation was controlled by allocating timeslot 6 in cell 1 to users closer to the base station. Transmitted power in timeslot 5 is higher, but the raise due to the interference is smaller. Moreover, it was observed that the transmitted power by the base stations was almost not affected by the UL transmissions, when considering the crossed timeslots. This agrees with the expected behaviour derived from the analysis.

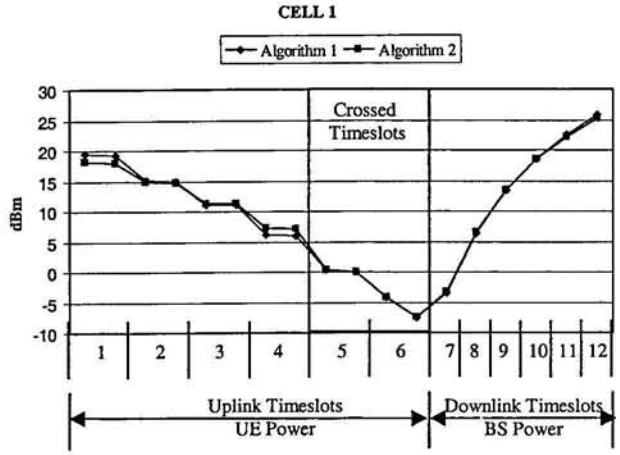

Figure 6.16 - Scenario 4 - transmitted power per timeslot in cell 1

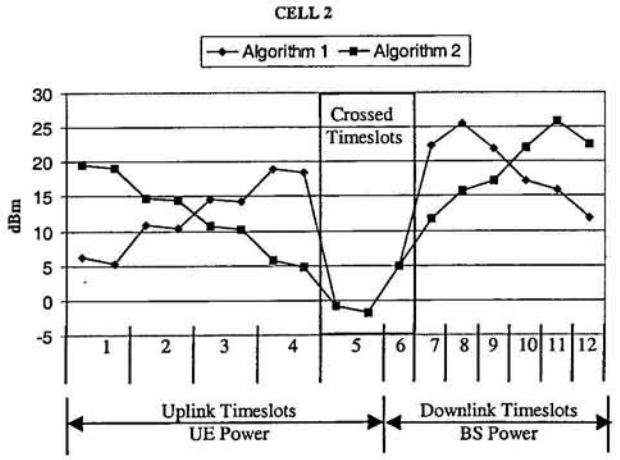

Figure 6.17 - Scenario 4 - transmitted power per timeslot in cell 2

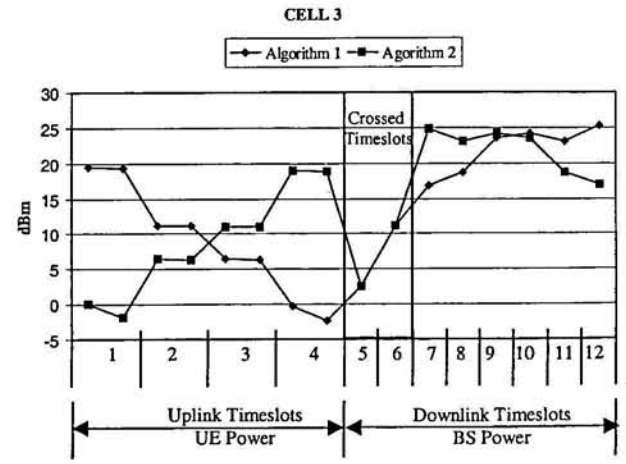

Figure 6.18 - Scenario 4 - transmitted power per timeslot in cell 3

6.6 Concluding Remarks

Simulation results clearly showed that intelligent DCA algorithms improve resource utilization in UTRA-TDD systems. Moreover, allocation of crossed timeslots is mandatory to handle different

traffic asymmetries in neighbouring cells. The use of information about the position of a UE as the basic criterion for DCA algorithms proved to be quite efficient. The results also showed that the behaviour of UL, DL and crossed timeslots is rather different as far as sensitivity to critical parameters. It was also possible to evaluate the relative impact of interference on the raise of the power level, as well as the mutual and cumulative impact of interference between cells.

The most critical situation relates to the UL direction. In pure UL timeslots, the risk of a UE being in outage is mainly due to its location close to the cell border, although interference from an adjacent cell may cause a critical threshold to be overtaken. However, the interference due to the neighbouring cell is reduced if, in this cell, the same timeslot is allocated to UEs closer to the BS. On the other hand, UEs close to their BS are not much affected by the interference due to an adjacent cell, even in the worst-case condition. This means that with the proposed allocation strategy it is possible to reduce the risk of outage for UEs close to the cell border, without penalising the other UEs.

DL timeslots have a similar behaviour, although less critical, since the higher power budget for the BS provides quite a safe margin and therefore the risk of outage is very low.

Finally, the case of crossed timeslots is much more complex. In the first place, as already said, it is not feasible to allocate a given timeslot to UEs, in adjacent cells close to each other, that is, near the border between cells. This is a very strong restriction, but it is possible to exploit some other allocation combinations. The most favourable one corresponds to allocating crossed timeslots to UEs as close to their BS as possible, but these are not the only possible solutions. The main conclusions are:

- a transmitting UE (UL timeslot) has its outage margin severely reduced, even if close to the BS, as long as a receiving UE (DL timeslot) moves away from the BS;
- a transmitting UE (UL timeslot) close to a cell border is in a higher risk of outage in crossed timeslots, even if the receiving UE (DL timeslot) are close to the BS;
- crossed timeslots in the UL direction are strongly affected by BS-to-BS interference; improvements can be achieved using directional or smart antennas.

The DCA algorithms can be exploited with a higher number of cells and adapted to the use of smart antennas.

6.7 Chapter References

[1] ARROWS D17 Deliverable, "Final Report of the Evaluation of RRM algoritms by Simulation" September 2002 (available in www.arrows-ist.upc.es).

[2] A.L.S.Castro, R.N. Castro, R.A. Castro, José Ruela, "Dynamic Channel Allocation in UTRA-TDD Systems Considering Asymmetrical Traffic", *Proceedings of the IST Mobile & Wireless Communication Summit 2003*, Vol.2, pp. 446-450, June 2003.

7
Autonomous Dynamic Channel Allocation Strategy

7.1 Introduction

According to the previous chapter, Dynamic Channel Allocation (DCA) strategies constitute the main *tool* for allocating channels into timeslots and for overcoming inter-cell interference. Many efficient DCA strategies have been reported, but in most cases they do not directly solve the interference problem; instead, they try to solve it indirectly, making the algorithms work hard in finding the best combination (in terms of some cost function) for allocating the users into the system. In fact, those algorithms are designed to manage interference or, in other words, to find out a specific combination that tries to reduce as much as possible its influence in the channel allocation process.

The worst interference conditions arise when there are crossed timeslots. In this case, the gains in performance due to DCA strategies may be marginal and additional complexity is introduced into the Radio Resource Management (RRM) algorithms (for example, Power Control, Admission Control and Congestion Control algorithms). These problems occur since interference values in crossed timeslots may be much higher and their influence more difficult to manage than in pure UL or DL timeslots. However, in an ideal scenario with no interference or with the interference mitigated, the channel allocation procedure could be based only on available system resources, since the interference would not be the main concern any longer.

In this chapter, an efficient method for mitigating the inter-cell interference and allocating system resources to users is proposed. It uses the concept[22] of smart antennas at base stations, which establishes that these antennas can be designed to steer a high gain to a particular direction and nulls to the undesired directions, combined with a Dynamic Channel Allocation (DCA) algorithm to allocate systems resources to mobile users.

The remainder of this chapter is organised as follows. In Section 2, the concept utilized in mitigating inter-cell interference is described. Section 3 shows how the proposed methodology was translated into a DCA algorithm. The simulation environment, parameters and results are presented and discussed in Section 4, whereas Section 5 finalises with the concluding remarks.

[22] This concept is characterized by using *ideal* antennas where nulls are considered as a position in the radiation pattern where the response is zero.

7.2 An approach for solving the inter-cell interference problem by using smart antennas

According to the analysis carried out in section 4.3, the types of inter-cell interference that arise in a typical asymmetrical UTRA-TDD system using omnidirectional antennas at base stations were summarized in Table 4.1. This table is reproduced here for convenience.

Pure UL timeslots	$\sum_{UE} I_{UE \rightarrow BS_i} + N_0$
Pure DL timeslots	$\sum_{BS} I_{BS \rightarrow UE_i} + N_0$
Uplink Crossed timeslots	$\left(\sum_{UE} I_{UE \rightarrow BS_i}\right) + \sum_{BS} I_{BS \rightarrow BS_i} + N_0$
Downlink Crossed timeslots	$\left(\sum_{BS} I_{BS \rightarrow UE_i}\right) + \sum_{UE} I_{UE \rightarrow UE_i} + N_0$

Table 7.1 - Inter-cell interference of UTRA-TDD systems

Now, the use of smart antennas at base stations will be analyzed based on Figure 7.1[23]. These antennas have the ability to steer narrow or wide beams to desired directions and nulls to undesired ones. Although the realisation of true nulls or zero response is not possible due to practical considerations [1], in this work the concept of *ideal* smart antennas was considered.

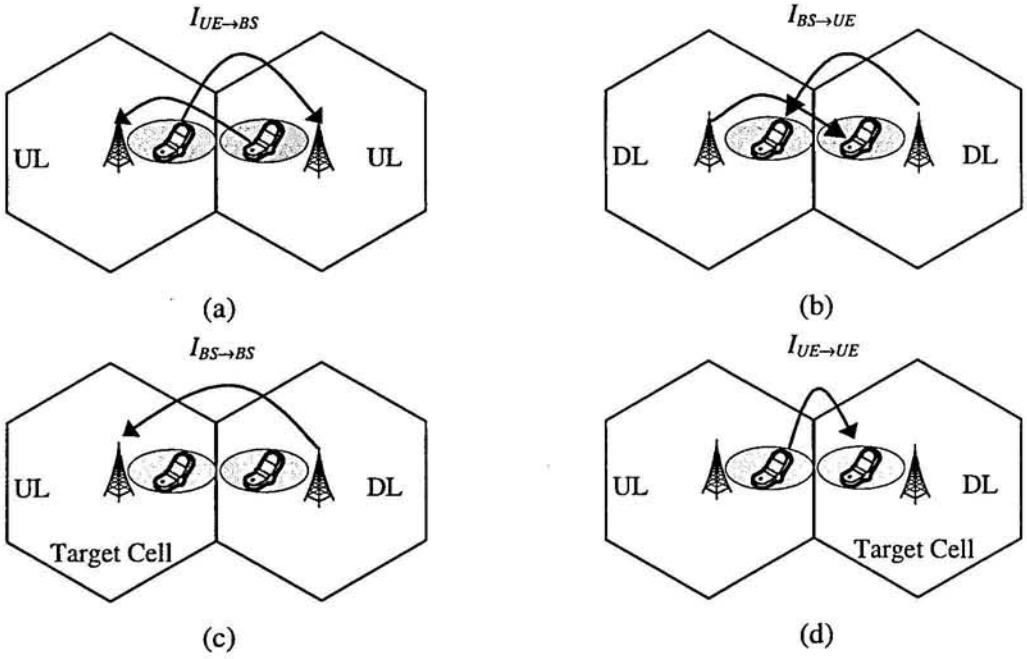

Figure 7.1 - Inter-cell interference with smart antennas at base stations. (a) pure uplink timeslots, (b) pure downlink timeslots, (c) uplink crossed timeslot and, (d) downlink crossed timeslot.

Interference scenarios in Figure 7.1 are the same as in Figure 4.3 and Figure 4.4; Table 7.1 can be used to compute inter-cell interference. However, let us assume that, for a given timeslot, the

[23] The grey ellipses represent the radiation patterns of smart antennas at base stations.

beams of smart antennas ***are not pointed to each other***. Figure 7.2 exemplifies a scenario where this constraint is considered.

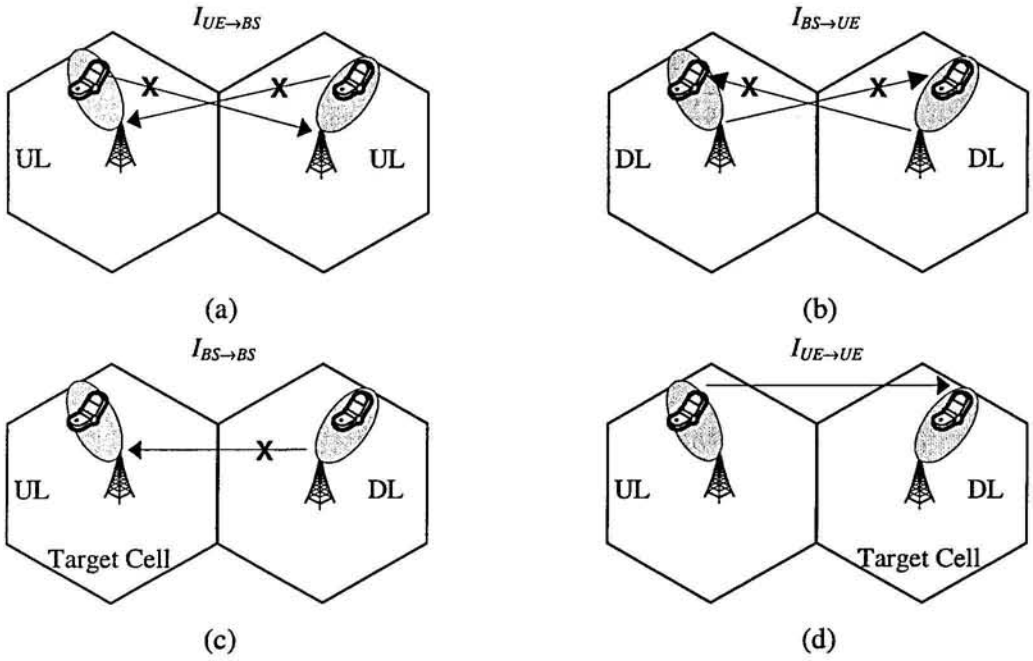

Figure 7.2 - Inter-cell interference with smart antennas at base stations. (a) pure uplink slots, (b) pure downlink slots, (c) uplink crossed timeslot and, (d) downlink crossed timeslot.

Assuming that an antenna can be used either for transmission or reception (the gain is the same in both cases) [2][3], the analysis can be divided in three parts: pure UL, pure DL and crossed timeslots.

Pure UL timeslots

According to the analysis in Figure 7.1(a), only $I_{UE \rightarrow BS}$ interference arises. However, considering Figure 7.2(a), we can see that $I_{UE \rightarrow BS}$ interference is eliminated, since nulls of the radiation pattern of antennas at base stations are placed in $I_{UE \rightarrow BS}$ direction.

Pure DL timeslots

Only $I_{BS \rightarrow UE}$ interference occurs in pure DL timeslots. In Figure 7.2(b), nulls of the radiation pattern of antennas at base stations are placed in $I_{BS \rightarrow UE}$ direction and, therefore, the base station to user interference is eliminated.

Crossed timeslots

As discussed, interference in crossed timeslots is due to users and/or base stations. According to Figure 7.2(c), $I_{BS \rightarrow BS}$ is eliminated since nulls of the radiation pattern are placed in the direction of that interference. $I_{UE \rightarrow UE}$ is the only interference arising in this case, since the concept of smart antennas was not applied to users' equipment. In a multi-cell environment and considering that in

some neighbouring cells a crossed timeslot may be used in the same direction as in the target cell, $I_{UE \rightarrow BS}$ and $I_{BS \rightarrow UE}$ are also eliminated. Table 7.2 summarises all sources of inter-cell interference considering that the beams of smart antennas at base stations are not pointed to each other.

Pure UL Slots	N_0
Pure DL Slots	N_0
Uplink Crossed Slots	N_0
Downlink Crossed Slots	$\sum_{UE} I_{UE \rightarrow UE} + N_0$

Table 7.2 - Inter-cell interference with smart antennas at base station for scenario of Figure 7.2

Based on the previous analysis, some remarks can be made:

- The ***sine qua non*** condition for mitigating inter-cell interference is to avoid the scenarios shown in Figure 7.1, by using smart antennas at base stations. In other words, cases where the radiation patterns of antennas at base stations are not *pointed to each other* (Figure 7.2) should be exploited.
- Although $I_{UE \rightarrow UE}$ can be extremely harmful to the system when users in adjacent cells are close to each other (near the common cell border), this harmful effect is strongly minimized by avoiding scenarios like those in Table 7.1(d).
- If the scenario shown in Figure 7.1 (beams of smart antennas pointed to each other) could not be avoided, then the allocation of pure UL and DL timeslots should be tried (Figure 7.1(a), (b)). In that case, the position of users as the basic criterion for mitigating inter-cell interference can be used, as described in chapter 6 and in [4].

One of main contributions of this thesis is the proposal of a DCA strategy that considers the previous methodology and tries, as much as possible, to avoid the scenarios presented in Figure 7.1. The next section describes how the proposed methodology was translated into a DCA algorithm.

7.3 Autonomous Dynamic Channel Allocation Strategy

The following description is based on the work presented in [5]. Before describing the DCA strategy, it is necessary to introduce two new parameters:

- Sector identifier (x_{ij}): this parameter represents the sector x of cell i that is *directed at* cell j. The sectors identifiers are defined at network planning time and do not change afterwards.
- Difference in traffic patterns (DTP_{ij} index): this index is a measure of how much traffic in cell i differs from traffic in cell j (partition between UL and DL slots). Considering hexagonal cells and the 1st tier, DTP_{ij} can be expressed as:

$$DTP_{ij} = SP_i - SP_j\big|_{j=1..6} \tag{7.1}$$

where SP_i represents the switching point of target cell (i) and SP_j is the switching point of neighbouring cell (j) in the 1st tier (assuming hexagonal cells, j varies from 1 to 6 since there are six cells surrounding the target cell). In this work, a single SP, separating UL and DL timeslots, is assumed. DTP_{ij} is an integer (positive, negative or zero) that gives DCA the information about the difference in traffic patterns between two cells. This information is obtained according to the following:

- $DTP_{ij} \rangle 0$ - represents the number of downlink timeslots that cell j has in excess to cell i.
- $DTP_{ij} = 0$ - means that cells i and j have the same traffic pattern (same partition between UL and DL).
- $DTP_{ij} \langle 0$ - represents the number of downlink timeslots that cell i has in excess to cell j.

In the following, the steps carried out by the DCA algorithm are summarised:

STEP 1: Computation of DTP_{ij} between the cell of interest and the neighbouring cells (1st tier):

STEP 2: According to the DTP_{ij} index, cell i builds a table in which:

- DTP_{ij} are sorted in descending order;
- Each DTP_{ij} is associated with a priority level. The largest DTP_{ij} value is associated with the lowest priority level and the association for the remaining values follows the same rule;
- Sectors (x_{ij}) are associated with DTP_{ij} and, therefore, with the DTP_{ij} priority levels previously assigned.
- Users are associated with sectors x_{ij} and, as a result, to priority levels assigned to sectors.

STEP 3: Based on the previous table (STEP 2), the DCA algorithm starts allocating the users into timeslots. The allocation process is initiated starting from the timeslots far from the SP and allocating the users *labelled* with the lowest (L) priority level for UL and the highest (H) priority level for DL. Figure 7.3 shows the channel allocation process carried out by the DCA algorithm in a UTRA-TDD frame.

It is worth highlighting that the steps carried out by the algorithm try to avoid the worst situation, that is, the crossed timeslots, in other words, the scenarios presented in Figure 7.1.

As mentioned before, if the scenarios shown in Figure 7.1 could not be avoided, then the allocation of pure UL and DL timeslots should be tried. Even when this situation is not feasible and the scenarios of Figure 7.1(c) and Figure 7.1(d) arise, the analysis carried out in chapter 5 and 6 can be perfectly applied; that is, the position of users is still used as the basic criterion for the allocating

process. This strategy is only possible because, as can be noted in Figure 7.2, the allocation problem is reduced to a problem of two adjacent cells.

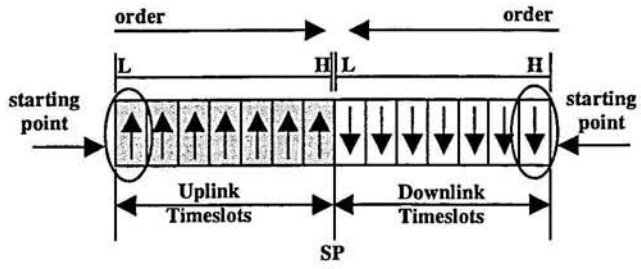

Figure 7.3 – Allocation process in a frame.

The validation of the strategy as well as the DCA algorithm was carried out by simulation. In the next section, the environment and parameters used in the simulations and the results obtained are presented and discussed.

7.4 Simulation Environment

Simulations have been carried out using the OPNET™ tool for which a TD/CDMA system has been developed (see section 5.2 and Appendix A).

A cluster of seven hexagonal cells was used, with the target cell in the centre, surrounded by the six remaining cells (see Figure 5.1); 14 timeslots were considered for allocation in each frame. Different traffic patterns were generated in the surrounding cells, which correspond to four crossed timeslots. According to [6], the probability of overlapping four or more timeslots (crossed timeslots) in an UTRA-TDD system is almost zero. Thus, four crossed timeslots is a reasonable number.

In terms of propagation that affects the signals, obstacles, scattering sources and small scale fading effects are considered resolved or mitigated by devices and techniques, which are briefly pointed out in chapter 2 and 3. In fact, following the analysis carried out in [7]-[9], it is really possible to assume that small scale fading and multipath effects can be mitigated by using some adequate devices and techniques (see chapter 2 and 3).

In terms of large-scale effects, Xia [10] developed the propagation models adopted by 3GPP [11] and by ARROWS project [12] that consider the attenuation suffered by a signal travelling in urban and suburban environments. The blocking effects (shadowing) provided by buildings (block of flats and high-rise buildings), hilly and similar obstacles are considered by adding 10 or 12 dB to the path loss. Only cells in the 1st tier are taken into account for determining the total inter-cell interference. Although this assumption can generate errors, these are not significant and the results are perfectly acceptable [13].

Although four types of services are envisaged for 3G UMTS, only two were considered in the simulations: a conversational one (e.g., video-telephony) with a bit rate of 64 kbit/s in each direction, and a streaming service (e.g., video streaming) with a bit rate of 32 kbit/s in the DL direction.

The simulation parameters used in the simulation are the same as described in section 6.5, which are listed in Table 7.3.

Cell Parameters		
Cell Environment	Hexagonal Macro-cells	
Cell Radius	R=600m	
Cluster Size	*N=1*	
BS parameters		
Maximum transmitted power	43 dBm	
Thermal noise power	-99 dBm	
Shadowing deviation	10 dBm	
UE parameters		
Max. transmitted power	21 dBm	
Min. transmitted power	-44 dBm	
Thermal noise power	-103.2 dBm	
Traffic model	Conversational	Streaming
Offered bit rate	64 kbit/s	32 kbit/s
Activity factor	1	
QoS parameters		
E_b/N_o target	1.5 dB	
	Conversational	Streaming
Transport formats	TF1 (2x640)	TF3 (4x320)
SF	2	4
SIR	-7.53 dB	-10.54 dB
Propagation model		
UE $\leftrightarrow$ BS	$L(d) = 128.1 + 37.6 \log d(km) + 10dB$	
UE $\rightarrow$ UE	$L(d) = 128.1 + 37.6 \log d(km) + 12dB$	
BS $\rightarrow$ BS	$L(d) = 38.25 + 20 \log d(m) + 12dB$	

Table 7.3 - Simulation parameters

7.4.1 Simulation Results

Simulations were carried out in two cases, to account for asymmetrical and symmetrical traffic patterns. In the first case, various mixes of conversational and streaming services were considered, allowing the generation of traffic with different asymmetry patterns ($DPT_{ij} \neq 0$). For a given asymmetry pattern, two sets of simulations were carried out, considering intra-sector and inter-sector movements. Dividing the cell, for example, in six sectors, intra-sector movements of a UE are characterized by the movements in the same sector of a cell whereas inter-sector movements mean a kind of intra-cell handover in which the UE moves itself through different sectors in a cell. Figure 7.4 illustrates the intra- and inter-sector movements considered in the simulations. These two sets of simulations were intended to observe on sensitivity of the method to UE mobility.

Many scenarios were simulated to show the performance of the method. The main differences among these scenarios were related to different degrees of asymmetry in the traffic pattern among the surrounding cells and the target cell. In these asymmetrical scenarios, the traffic pattern in the target cell was considered symmetrical, that is, equal partition between UL and DL timeslots (seven for uplink and seven for downlink). Figure 7.5 shows one of these scenarios used in the simulations. Although several scenarios were simulated and many results were obtained from these simulations, we will show the results based on Figure 7.5, since the performance and analysis for other asymmetrical scenarios were identical. The UEs in the target cell were placed in the cell border (worst situation according to chapter 6) while the users in the neighbouring cells were uniformly spread in the respective cell (see Figure 5.1).

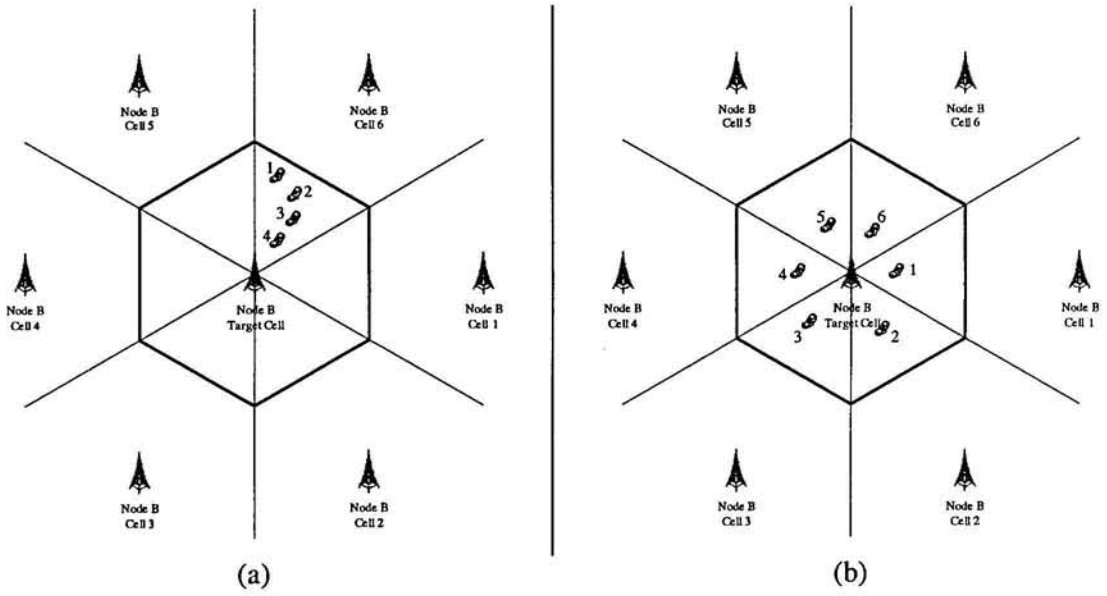

Figure 7.4 - UE movements. (a) Intra-sector and (b) Inter-sector movements

7.4.1.1 Scenario 1 – asymmetrical case

The first scenario to be analysed is shown in Figure 7.5. This scenario consists of a centre cell (target cell) surrounded by six cells with different and asymmetrical traffic patterns as shown in the figure. Fourteen timeslots are used in this scenario and, in the centre cell, equal partition between UL and DL is considered. As mentioned before, in the neighbouring cells, the users are uniformly spread in the cells and Table 7.4 shows the configuration of each cell in terms of number of users, services and degree of asymmetry among cells. Because of the different degrees of asymmetry among neighbouring cells, four crossed timeslots appear.

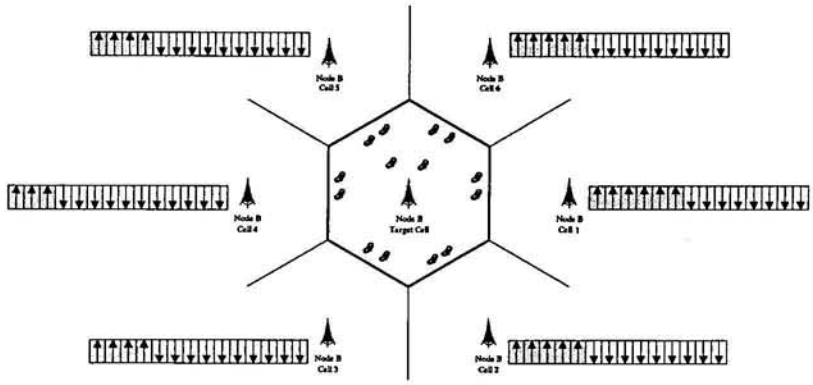

Figure 7.5 - Scenario 1 - asymmetrical case

	# UEs	SP (UL timeslot)
Target Cell	14 UEs Conversational	7
Cell 1	12 UEs Conversational 08 UEs Streaming	6
Cell 2	10 UEs Conversational 16 UEs Streaming	5
Cell 3	08 UEs Conversational 24 UEs Streaming	4
Cell 4	06 UEs Conversational 32 UEs Streaming	3
Cell 5	08 UEs Conversational 24 UEs Streaming	4
Cell 6	10 UEs Conversational 16 UEs Streaming	5

Table 7.4 - Cell parameters for scenario 1

Figure 7.6 shows the transmitted power per timeslot for scenario 1. This figure also shows the performance of the strategy for a case of intra-sector movements.

According to the simulations results, it was demonstrated that is really possible, by using the proposed DCA strategy to take advantage of the benefits provided by using smart antennas at base station in terms of, mainly, interference mitigation. By comparing the transmitted powers without interference with the transmitted powers with interference the performance evaluation was carried out.

As can be noted in Figure 7.6, there is hardly inter-cell interference and, therefore, interference does not represent the main concern. The allocation process is simply based on the available resources that, in UTRA-TDD, are represented by a triple: code, timeslot and frequency.

From Figure 7.6, the spatial filtering property of smart antennas provides an additional orthogonality to the system. Intra-sector movements of a user (circle highlighted in the figure) do not affect the other allocations in terms of interference level. This is due to the fact that there is no intra-cell handover, that is, the movement does not cause a timeslot change. Particularly, for this

specific movement, the UE is not submitted to any interference. However, if a user in timeslot 5 moved (intra-sector movement) and if there was not a change of timeslot, the interference would affect it. Of course, the level of interference would depend on the UE location in the sector.

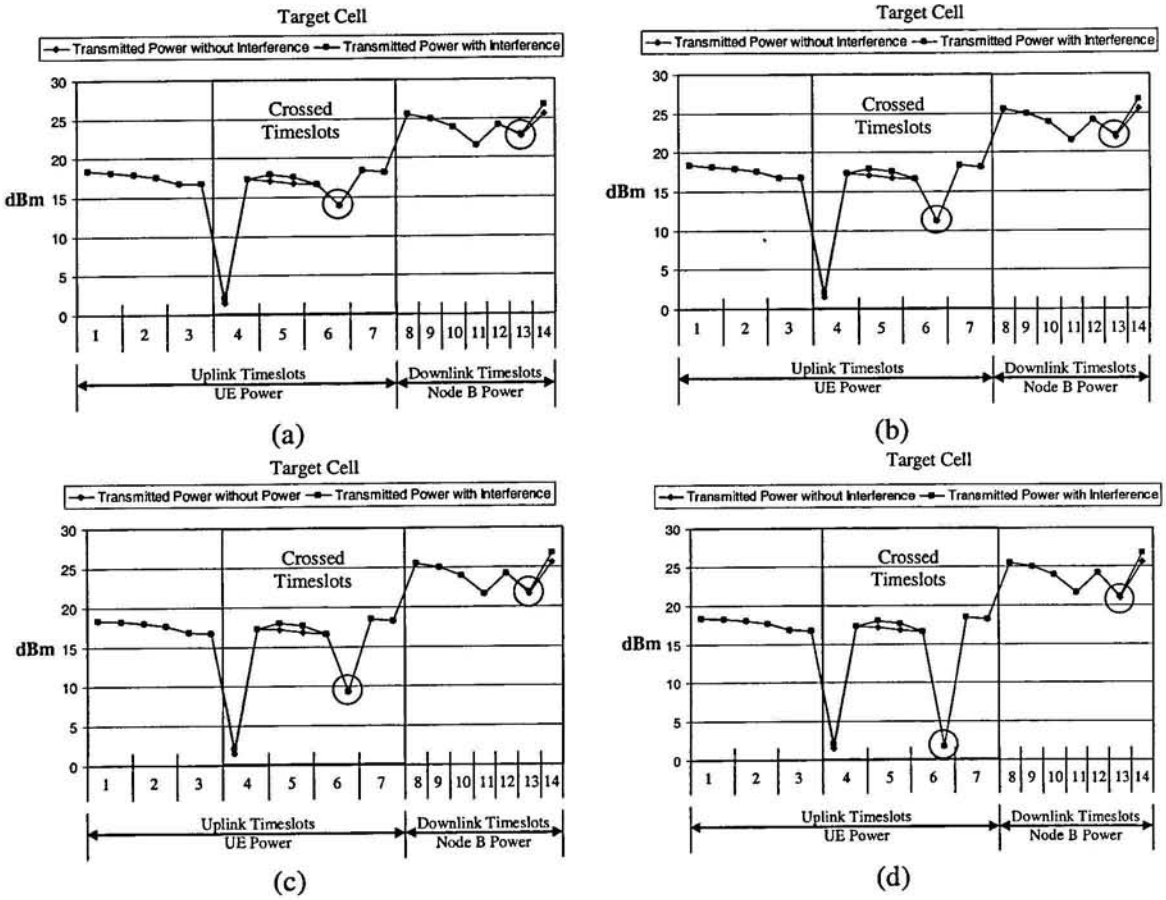

Figure 7.6 - Transmitted power per timeslots (scenario 1 - intra-sector movements); (a) position 1; (b) position 2; (c) position 3 and, (d) position 4.

As analysed before, pure UL and DL timeslots are not critical issues and the performance results of the DCA algorithm proved extremely satisfactory in terms of interference mitigation.

As far as the interference in crossed timeslots shown in Figure 7.6 is concerned, it is not caused by a *"crossed timeslot"*, that is, a DL timeslot in an adjacent cell but by a UL timeslot. Recalling Table 7.1, this interference is represented by the term in the brackets and only relative to one adjacent cell, since the problem is only related to two adjacent cells (as explained before). The risk of these UEs coming into an outage condition only depends on their position close to the cell border, as concluded in chapter 6.

Figure 7.7 shows the results for the case of inter-sector movements. As can be noted, the conclusions are the same as in the case of intra-sector movements. The interference in the crossed timeslots is due to UL timeslots in an adjacent cell and, again, the risk of outage is mainly due to the location of UEs (cell border).

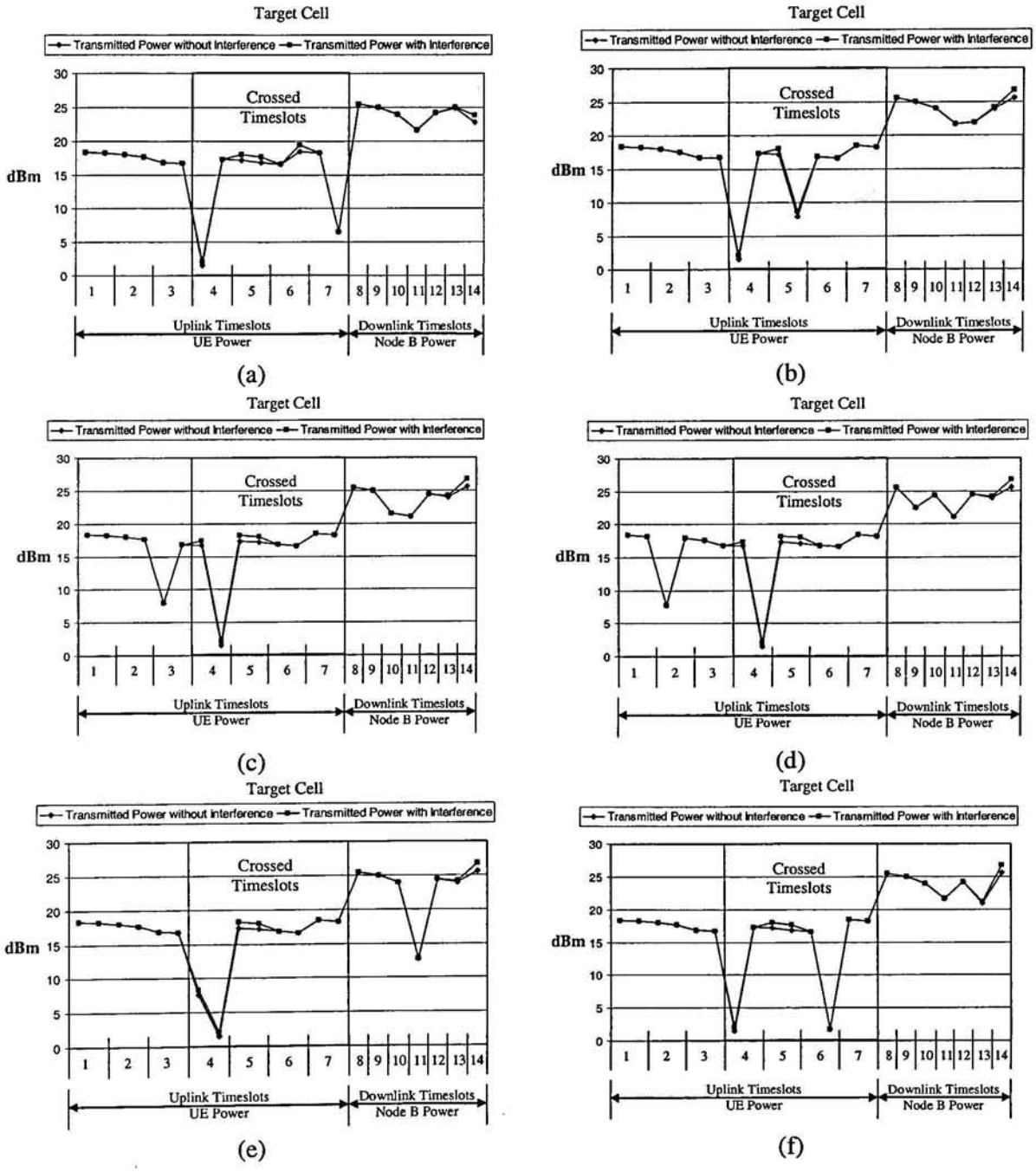

Figure 7.7 - Transmitted power per timeslots (scenario 1 - inter-cell movements). (a) position 1; (b) position 2; (c) position 3; (d) position 4; (e) position 5 and, (f) position 6.

Inter-sector movements, which mean intra-cell handover, cause an UE to be submitted to different levels of interferences according to the allocated timeslot. This allows us to conclude that the traffic pattern in neighbouring cells is the main factor that determines the interference profile in the timeslots.

For example, for the traffic pattern of Figure 7.5, crossed timeslot 5 is always submitted to a certain amount of interference while pure UL timeslot 3 and pure DL timeslot 9 is not submitted to interference. Thus, when the UE undergoes a handover into these timeslots, it receives a certain

amount of interference (timeslot 5) or not (timeslots 3 and 9). Again, the amount of interference is related to the position of the UE in the sector or cell.

As far as the system capacity is concerned, the mitigation of interference and the DCA strategy provided that no UE was blocked or dropped and, therefore, the maximum capacity of the system could be maintained, that is, neither the UEs or BSs came into the outage condition.

7.4.1.2 Scenario 2 – asymmetrical case in target cell

Scenario 2 is aimed at providing the performance evaluation of the DCA strategy considering now that the target cell does not have equal partition between UL and DL transmissions. In the previous scenario, only uplink crossed timeslots were analysed; in this section, however, not only uplink timeslots but also downlink crossed timeslots will be analysed. Figure 7.8 shows four cases of different partitions in the target cell.

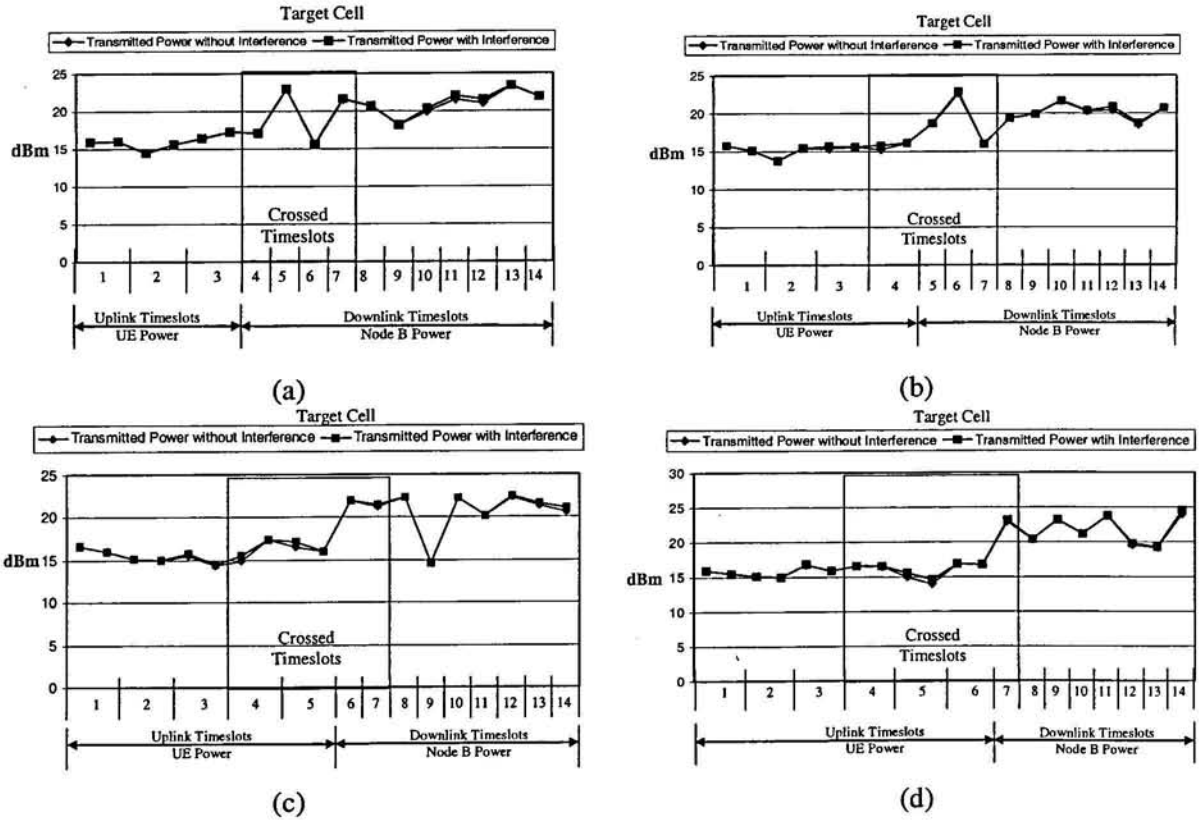

Figure 7.8 - Scenario 2 - asymmetrical case. (a) 3 UL timeslots, (b) 4 UL timeslots, (d) 5 UL timeslots and, (d) 6 UL timeslots

Figure 7.8(a) presents a typical case of downlink crossed timeslots, only. In this scenario, the crossed timeslots in the target cell are all set for DL transmissions and the interference received by the UEs are from UEs in other cells, that is, $I_{UE \rightarrow UE}$ interference. Although not visible in Figure 7.8(a), $I_{UE \rightarrow UE}$ is very small and originates a rise of less than 1 dB in the transmitted power of BS

as compared to the values without interference. Table 7.5 lists the inter-cell interference rises in downlink crossed timeslots for scenario 2.

BS Power	Timeslot 4 (dBm)	Timeslot 5 (dBm)	Timeslot 6 (dBm)	Timeslot 7 (dBm)
Transmitted Power without Interference	17.03334	22.9413	15.52904	21.5435
Transmitted Power with Interference	17.04274	22.9517	15.58063	21.6006

Table 7.5 - Inter-cell interference raises in scenario 2

In Figure 7.8(b), Figure 7.8(c) and Figure 7.8(d), there is a mix of uplink and downlink crossed timeslots. The analysis in downlink crossed timeslots is the same as Figure 7.8(a) with the interference received by UEs in the target cell being characterized by the UE-to-UE interference. For uplink crossed timeslots the analysis follows the one carried out in section 7.4.1.1. Pure UL and DL timeslots are not a critical issues and, again, the performance of the DCA algorithm has shown goods results in terms of interference mitigation.

7.4.1.3 Scenario 3 – symmetrical case

It has been shown that pure UL and DL timeslots are not critical issues, as presented in the previous chapters.

In chapter 6, scenarios with omnidirectional antennas at base stations were analysed, and the main conclusion was that the risk of a UE (pure timeslot) coming into the outage condition was mainly due to its location close to a cell border. This analysis mainly considered two adjacent cells and lead to the conclusion that the risk of outage increases when the number of adjacent cells increases. This is due to various interference sources that arise from the surrounding cells.

Scenario 3 is intended to provide an environment to show the effectiveness of DCA strategy in the case of multiple cells. Scenario 3 (Figure 7.9) is related to the symmetrical case ($DTP_{ij}=0$) in all seven cells; thus, there are only pure UL and DL timeslots (no crossed timeslots).

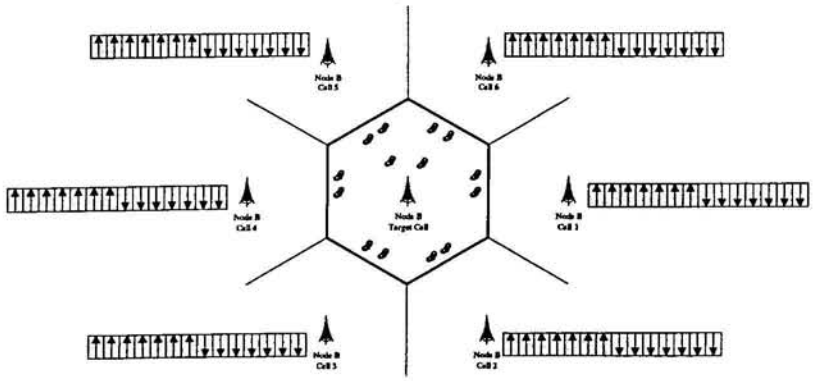

Figure 7.9 - Scenario 3 - symmetrical case

Before analysing the performance of the DCA strategy for the symmetrical case, it is worth mentioning that according to STEP 2 of the DCA algorithm described in section 7.3, the DTP_{ij}

index are sorted in descending order. However, when $DTP_{ij}=0$ for all surrounding cells of the target cell, the DTP_{ij} are sorted according to the sector numbers. The sectors are numbered such as presented in Figure 7.4(b), that is, inter-sector position 1 corresponds to sector 1 and so forth. After this sorting, the allocation algorithm follows according to STEP 3. Again, the analysis was carried out in two ways: considering intra- and inter-sector movement of a UE. Figure 7.10 shows the simulation results for the case of intra-sector movements.

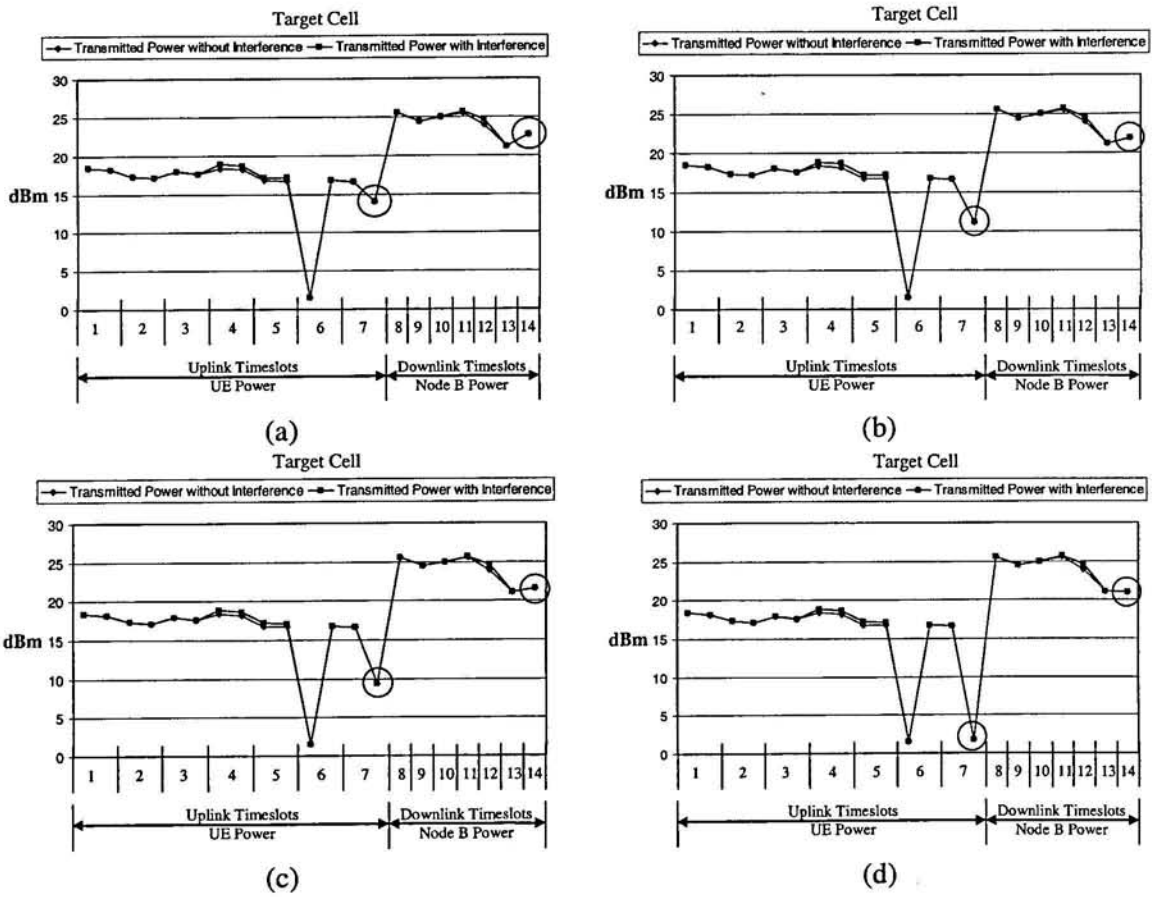

Figure 7.10 - Transmitted power per timeslots (scenario 3 - intra-sector case). (a) Position 1; (b) position 2; (c) position 3 and, (d) position 4

As can be seen, the performance of the method is highly satisfactory, there is hardly interference and the allocation process is based on the available RUs (code, timeslot and frequency).

The interference that arises, for example, in timeslots 4, 5 and 12 is due to $I_{UE \rightarrow BS}$ (timeslots 4 and 5) and $I_{BS \rightarrow UE}$ (timeslot 12). Due to the spatial filtering property of smart antennas the interference problem is reduced to an interference problem between two adjacent cells; therefore, interferences is relative to one adjacent cell and not to the other cells. Figure 7.11 presents the simulation results for the case of inter-sector movements. As far as the interference received by the UE is concerned, the conclusion is the same as for Figure 7.7, that is, intra-cell handovers cause a UE to be submitted to different levels of interference according to the allocated timeslots. This interference is only due

to one single adjacent cell. However, as can be seen, none of the UEs has gone into an outage condition.

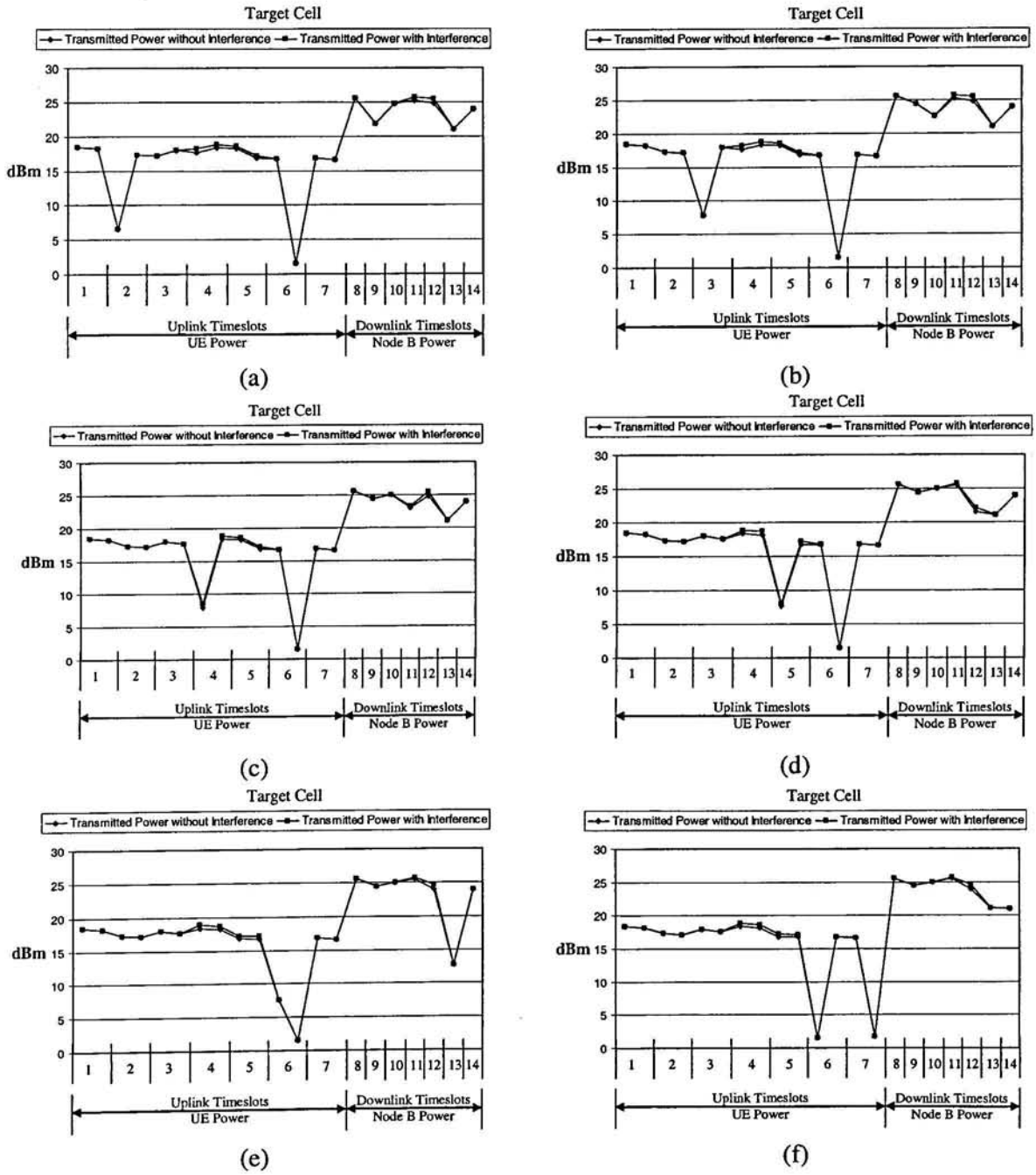

Figure 7.11 - Transmitted power per timeslots (scenario 3 - inter-sector case). (a) Position 1; (b) position 2; (c) position 3, (d) position 4, (e) position 5 and, (f) position 6

7.5 Concluding Remarks

This chapter presented the performance evaluation of the DCA strategy proposed in this thesis. It was demonstrated that it is possible to take advantage of the benefits provided by using smart antennas for allocating users to the system. As can be seen, there is hardly inter-cell interference and, consequently, inter-cell interference does not represent the main concern; thus, the allocation

process is simply based on the available resources that, in UTRA-TDD systems, are represented by a triple: code, slot and frequency. In that way, the DCA process can be expressed as a Dynamic Resource Allocation (DRA) strategy and the RRM algorithms (such as Admission Control, Power Control and Congestion Control) can have their complexity considerably reduced.

As far as system capacity is concerned, the results presented and discussed in this chapter have also shown that, applying the methodology, none of the UE was led into an outage condition and the maximum allowed system capacity was maintained.

7.6 Chapter References

[1] J.S. Blogh and L. Hanzo, Third-generation Systems and Intelligent Wireless Networking: Smart Antennas and Adaptive Modulation, *John Wiley & Sons*, Ltd, p. 413, 2002.

[2] L. C. Godara, "Applications of Antenna Arrays to Mobile Communications, Part I: Performance, Improvement, Feasibility, and System Considerations", *Proceedings of the IEEE*, Vol. 85, No. 7, pp. 1031-1060, July 1997.

[3] T. Bao Vu, "Smart Antenna System Architecture and Hardware Implementation", *In Handbook of antennas in wireless communications – Chapter 22,* CRC Press, ISBN 0-8493-0124-6, p.936 2002.

[4] A.L.S. Castro, R.A. Castro, R.N. Castro, J. Ruela, "Dynamic channel allocation for UTRA-TDD systems considering asymmetrical traffic", *Proceedings of the 12th IST Summit on Mobile and Wireless Communications,* Vol. II, pp. 446-450, Aveiro, Portugal, June 2003.

[5] A. L. S. Castro, J. Ruela, "Autonomous Dynamic Resource Allocation for TD/CDMA-TDD Systems", *Proceedings of the 6th International Symposium on Wireless Personal Mobile Communications – WPMC'03*, Japan, October 2003

[6] R. Schelb, T. Winter, "Adaptive Switching Point Simulation for Different Traffic Profiles for UTRA-TDD", *Proceedings of the IEEE Vehicular Technology Conference*, pp.992-995, May 2001.

[7] B. Sklar, "Rayleigh Fading Channel in Mobile Digital Communication Systems – Part I: Characterization", *IEEE Communication Magazine*, pp.90-100, July 1997.

[8] B. Sklar, "Rayleigh Fading Channel in Mobile Digital Communication Systems – Part I: Mitigation", *IEEE Communication Magazine*, Vol.35, No.7, pp.102-109, July 1997.

[9] T.S. Rappaport, Wireless Communication: Principle and Practice -2nd Edition", *Prentice Hall PTR, Inc.*, ISBN 0-13-042232-0, p. 707, 2002.

[10] H.H. Xia, "A simplified Analytical Model for Predicting Path Loss in Urban and Suburban Environments", *IEEE Transaction on Vehicular Technology*, Vol. 46, No. 4, pp.1040-1046, November 1997.

[11] 3GPP TS 25.942 v6.1.0 (2003-09), "RF Systems Scenarios"

[12] ARROWS D17 Deliverable, "Final Report of the Evaluation of RRM algorithm by Simulation", September 2002, (available in www.arrows-ist.upc.es)

[13] P. Cardieri, "Resource Allocation and Adaptive Antennas in Cellular Communications", *PhD Thesis, Faculty of the Virginia Polytechnic Institute and State University*, September 2000, USA.

8
General Conclusions

8.1 Conclusions

In this thesis, an efficient method for mitigating inter-cell interference and allocating system resources to mobile stations in UTRA-TDD systems was presented. It used the concept of smart antennas at base stations, which establishes that these antennas can be designed to steer a high gain to a particular direction and nulls to the undesired directions, combined with a Dynamic Channel Allocation (DCA) algorithm to allocate system resources to mobile users.

Starting from a general description of the cellular system as well as the UTRA-TDD system, the characterization and analysis of the problem to be solved was carried out in chapter 4. In that chapter it was shown that the main problem in UTRA-TDD systems is related with two types of interference that arise in crossed timeslots, that is, UE-to-UE and BS-to-BS interference. These types of interference limit the performance of DCA strategies, which do not directly solve the interference problem; instead, they try to solve it indirectly, making the algorithms work hard in finding the best combination for allocating the users into the system. In fact, those algorithms are designed to manage interference as described in chapter 4.

The methodology proposed in this thesis is presented in chapter 5. An analytical model was derived and first simulations were carried out. Analytical and simulation results clearly showed that intelligent DCA algorithms improve resource utilization in TDD systems. Moreover, allocation of crossed timeslots is mandatory to handle different traffic asymmetries in neighbouring cells. The use of information about the position of a UE as the basic criterion for DCA algorithms proved to be quite efficient. The results also showed that the behaviour of UL, DL and crossed timeslots is rather different as far as sensitivity to critical parameters. It was also possible to evaluate the relative impact of interference on the raise of the power level, as well as the mutual and cumulative impact of interference between cells.

The most critical situation relates to the UL direction. In pure UL timeslots, the risk of a UE being in outage is mainly due to its location close to the cell border, although interference from an adjacent cell may cause a critical threshold to be overtaken. However, the interference due to the neighbouring cell is reduced if, in this cell, the same timeslot is allocated to UEs closer to the BS. On the other hand, UEs close to their BS are not much affected by the interference due to an adjacent cell, even in the worst-case condition. This means that with the algorithm presented in

chapter 6 it is possible to reduce the risk of outage for UEs close to the cell border, without penalising the other UEs.

DL timeslots have a similar behaviour, although less critical, since the higher power budget for the BS provides quite a safe margin and therefore the risk of outage is very low.

Finally, the case of crossed timeslots is much more complex. In the first place, as already said, it is not feasible to allocate a given timeslot to UEs, in adjacent cells, near the border between cells. This is a very strong restriction, but it is possible to exploit some other allocation combinations. The most favourable one corresponds to allocating crossed timeslots to UEs as close to their BS as possible, but these are not the only possible solutions. The main conclusions are:

- A transmitting UE (UL timeslot) has its outage margin severely reduced, even if close to the BS, as long as a receiving UE (DL timeslot) moves away from the BS;
- A transmitting UE (UL timeslot) close to a cell border is in a higher risk of outage in crossed timeslots, even if the receiving UE (DL timeslot) are close to the BS;
- Crossed timeslots in the UL direction are strongly affected by BS-to-BS interference; improvements can be achieved using directional or smart antennas.

However, the problem with the interference still remained. One alternative for overcoming this problem was to filter such an inter-cell interference. This filtering was possible and it was shown feasible in chapter 7, where the DCA algorithm was adapted to and combined with the use of smart antennas.

In chapter 7 a complete description of the method using smart antennas for mitigating the inter-cell interference was performed. According to the simulation results, it was demonstrated that it is possible, by using the proposed method and the DCA strategy, to take advantage of the benefits provided by using smart antennas. As proved by the results, there is no inter-cell interference and, consequently, inter-cell interference does not represent the main concern.

The main contributions of this strategy for the allocation process in UTRA-TDD systems can be summarised in following:

- Effective mitigation of $I_{UE \rightarrow BS}$, $I_{BS \rightarrow UE}$ and $I_{BS \rightarrow BS}$ interference and, as a consequence, the interference problem related with those.
- In pure uplink, pure downlink and uplink crossed timeslots, the performance evaluation of the system (considering no intra-cell interference) is no more characterized by the signal-to-interference ratio (SIR) but, instead, may be characterized by the signal-to-noise ratio (SNR).

- The inter-cell interference problem is reduced to an $I_{UE \rightarrow UE}$ in the downlink crossed timeslots.
- No matter how many cells are considered in a region, the use of the spatial filtering feature of smart antennas at base stations can reduce the inter-cell interference problem between two adjacent cells.
- Besides the computation of DTP_{ij} index, there is no additional computation carried out by the DCA algorithm. As far as the positions of mobile stations are concerned, the DCA algorithm acts as one normal "user" of system applications, e.g., applications related to location management, such as location services. These advantages allow executing the allocation process on a frame-by-frame basis and, autonomously, by each cell.
- Although this thesis has been developed considering the UTRA-TDD system, the proposed method can be applied to any TDMA/CDMA-TDD system.

As a consequence of mitigating the inter-cell interference, the allocation process can be simply based on the available resources that, in UTRA-TDD systems, are represented by a triple: code, timeslot and frequency. In that way, the DCA process can be expressed as a Dynamic Resource Allocation (DRA) strategy and the RRM algorithms (such as Admission Control, Power Control and Congestion Control) can have their complexity considerably reduced. Admission Control may have its function based only on the current available RU and on a criterion according to the priority of service. In congestion situations, the DCA reshuffling can be carried out or the strategy can indicate the critical inter-cell interference regions to Congestion Control, which can act according to this information, for example, scheduling UEs for further allocation/transmissions. In addition to several improvements that the use of the spatial filtering property of smart antennas can provide for Power Control, the proposed strategy may reduce the complexity of Power Control to a near-far problem since interference may be almost eliminated.

8.2 Limitations and Future Directions

The results obtained in this thesis were based on an analytical model and computer simulations. The translation of the analytical model as well as the algorithms into a computer program was subject to certain limitations. Therefore, the author recognises that the UTRA-TDD simulator needs to be optimised not only for improving its performance but also to include other functionalities of UTRA-TDD systems. Multi operator simulations as well as the simulation of four services envisaged for 3G UMTS can be included as optimisations for future work.

Although this thesis has used the spatial filtering concept of smart antennas, true nulls are almost impossible in practical situation. However, this constraint is not to be interpreted as a limitation of the simulator or of the method proposed in this thesis but as a means to reach a result in theory.

True adaptive antennas can be thought as improvements to be implemented at base stations in future work. As a consequence, tracking and multi beam environments, for increasing system capacity, can be included as well as for research.

It is worth mentioning that this thesis concentrated on developing a novel DCA strategy. Dynamic Channel Allocation is a heart of the allocation process in the UTRA-TDD system and its interactivity with the other RRM algorithms is crucial. Future adaptations in the simulator can also include other RRM algorithms, such as Power Control, Packet Scheduling and Congestion Control.

References in Alphabetical Order

[1] 3GPP TR 25.922 v5.2.0 (2003-12)- Radio Resource Management Strategies

[2] 3GPP TR 25.928 v4.0.1 (2001-03), "1.28 Mcps Functionality for UTRA TDD Physical Layer"

[3] 3GPP TR 25.942 v3.3.0 (2002-06), "RF System Scenarios"

[4] 3GPP TS 21.905 - Vocabulary for 3GPP Specifications

[5] 3GPP TS 23.107 v6.0.0 (2003-12) – "Quality of Service (QoS) Concept and Architecture".

[6] 3GPP TS 25.101 v5.1.0 (2001-12), "UE Radio Transmission and Reception (FDD)"

[7] 3GPP TS 25.102 v4.5.0 (2002-06), "UE Radio Transmission and Reception (TDD)"

[8] 3GPP TS 25.201 - Physical layer - general description

[9] 3GPP TS 25.221, v5.5.0 (2003-06) - Physical Channels and Mapping of Transport Channels onto Physical Channels (TDD).

[10] 3GPP TS 25.223, v6.6.0 (2003-12) – Spreading and Modulation (TDD).

[11] 3GPP TS 25.224 v 3.6.0, "Physical Layer Procedures (TDD)".

[12] 3GPP TS 25.301 - Radio Interface Protocol Architecture

[13] 3GPP TS 25.302 V6.0.0 (2003-12) - Services Provided by the Physical Layer.

[14] 3GPP TS 25.321, v5.6.0 (2003-09) – Medium Access Control (MAC) Protocol.

[15] 3GPP TS 25.322, v5.2.0 (2002-09) – Radio Link Control (RLC) Protocol.

[16] 3GPP TS 25.323, v5.2.0 (2002-09) – Packet Data Convergence Protocol (PDCP).

[17] 3GPP TS 25.324, v5.3.0 (2003-03) – Broadcast/Multicast control (BMC) protocol.

[18] 3GPP TS 25.331 - Radio Resource Control (RRC) Protocol Specification.

[19] 3GPP TS 25.401 v6.2.0 (2003-12)- UTRAN overall description

[20] 3GPP TS 25.942 v6.1.0. (2003-09), "RF Systems Scenarios"

[21] A. Hać, C. Mo, "Dynamic Channel Assignment in Wireless Communication Networks", *International Journal of Network Management*, Vol. 9, pp. 44-66, 1999.

[22] A. L. S. Castro, J. Ruela, "Autonomous Dynamic Resource Allocation for TD/CDMA-TDD Systems", *Proceedings of the 6th International Symposium on Wireless Personal Mobile Communications – WPMC'03*, Japan, October 2003.

[23] A. L. S. Castro, R. N. Castro, R. A. Castro, J. Ruela, "Dynamic Channel Allocation in UTRA-TDD Systems Considering Asymmetrical Traffic", *Proceedings of the IST Mobile & Wireless Communications Summit 2003*, Vol. 2, pp.446-450, June 2003.

[24] A. N. Rouskas, D. N. Skoutas, "OVSF Codes Assignment and Reassignment at the Forward Link of W-CDMA 3G Systems", *Proceedings of the 13th IEEE International Symposium on Personal, Indoor and Mobile Radio Communication*, Vol. 5, pp. 2404-2408, September 2002.

[25] A. O. Boukalov, Sven-Gustav Häggman, "Systems Aspects of Smart-Antenna Technology in Cellula Wireless Communications – An Overview", *IEEE Transactions on Microwave Theory and Techniques*, Vol. 48, No.6, pp.919-929, June 2000.

[26] A.H. Solana, A.V. Bardaji, F. C. Palacio, "Performance Analysis of Packet Scheduling Strategies for Multimedia Traffic in WCDMA", *Proceedings of the 55th Vehicular Technology Conference*, Vol. 1, pp.155-159, May 2002.

[27] Ahmed El Zooghby, "Potentials of Smart Antennas in CDMA Systems and Uplink Improvements", *IEEE Antennas and Propagation Magazine*, Vol. 43, No. 5, pp.172-177, October 2001.

[28] ARROWS D04 Deliverable, "System Specification and Radio Resource Management Algorithms: Identification and requirements", March 2001. (available in www.arrows-ist.upc.es)

[29] ARROWS D06 Deliverable, "Conceptual Studies on Radio Resource and QoS Management Algorithms" March 2002 (available in www.arrows-ist.upc.es).

[30] ARROWS D13 Deliverable, "First Report on the Evaluation of RRM Algorithm by Simulation" July 2002 (available in www.arrows-ist.upc.es).

[31] ARROWS D17 Deliverable, "Final Report of the Evaluation of RRM algorithm by Simulation", September 2002, (available in www.arrows-ist.upc.es)

[32] B. K. Ng, E. S. Sousa, "Performance Enhancement of DS-CDMA System Using Overlapping Sectors With Interference Avoidance", *IEEE Transaction on Wireless Communication*, Vol.2, No.1, pp. 175-185, January 2003.

[33] B. Sklar, "Rayleigh Fading Channel in Mobile Digital Communication Systems – Part I: Characterization", *IEEE Communication Magazine*, pp.90-100, July 1997.

[34] B. Sklar, "Rayleigh Fading Channel in Mobile Digital Communication Systems – Part II: Mitigation", *IEEE Communication Magazine*, Vol.35, No.7, pp.102-109, July 1997.

[35] B.P. Ng, M. H. Er, "Basic Array Theory and Pattern Synthesis Techniques", *In Handbook of Antennas in Wireless Communications* - Edited by L.C. Godara, *CRC Press*, ISBN 0-8493-0124-6, p.936, 2002.

[36] C. A. Balanis, "Antennas Theory – Analysis and Design", 2nd Edition, *John & Wiley Sons, Inc.*, ISBN 0-471-59268-4, p.941, 1997.

[37] C. Geβner, R. Köhn, J. Schniedenharn and, A. Sitte, "Layer 2 and Layer 3 UTRA-TDD", *Proceedings of the 51st Vehicular Technology Conference – VTC'00 - Spring*, Vol.2, pp. 1181-1185, 2000.

[38] C. Mihailescu, X. Lagrange, Ph. Godlewski, "Dynamic Resource Allocation for Packet Transmission in TDD TD-CDMA Systems" *Proceedings of the 49th Vehicular Tachnology Conference*, Vol. 2, pp. 1737-1741, May 1999.

[39] C. Mihailescu, X. Lagrange, Ph. Godlewski, "Dynamic Resource Allocation for UMTS TD-CDMA Systems", *Proceedings of the 3rd European Personal Mobile Communication Conference (EPMCC)*, Paris, France, March 1999.

[40] C. Mihailescu, X. Lagrange, Ph. Godlewski, "Performance Evaluation of a Dynamic Resource Allocation for UMTS-TDD Systems", *Proceedings of the IEEE Vehicular Technology Conference*, pp. 2339-2343, 2000.

[41] Chiung-Jang Chen, Li-Chun Wang, "Interference Suppression in TDD/CDMA Cellular Systems with Asymmetric traffic Using MVDR Beamforming", *Proceedings of the IEEE Vehicular Technology Conference – VTC'02 Fall*, Vol.1, pp.141-145, 2002.

[42] D. G. Jeong, W.S. Jeon, "CDMA/TDD system for Wireless Multimedia Services with Traffic Unbalance Between Uplink and Downlink", *IEEE Journal on Selected Areas in Communications*, Vol. 17, No. 5, pp.939-946, May 1999.

[43] D.M. Novakovic and M. Dukic, "Evolution of the Power Control Techniques for DS-CDMA Toward 3G Wireless Communication Systems", *IEEE Communications Surveys, 4th Quarter*, pp.2-15, 2000.

[44] Duel-Hallen, J. Holtzman, Z. Zvonar, "Multi-user Detection for CDMA Systems", *IEEE Personal Communications*, Vol. 2, No. 2, pp. 46-58, April 1995.

[45] E. Dahlman, P. Beming, J. Knutsson, F. Ovesjö, M. Persson, C. Roobol, "WCDMA – The Radio Interface for Future Mobile Multimedia Communications", *IEEE Transaction on Vehicular Technology*, Vol. 47, No. 4, pp. 1105-1118, November 1998.

[46] E. Fukuda, A. Noda, M. Higuchi, "Overview of Global Standardization of IMT-2000 and Its Evolution", *FUJITSHU Scientific & Technological Journal*, Vol.38, No. 2, pp.238-253, December 2002.

[47] E. P. Lyle Jr., "The Advance of Wireless", *World's Work*, pp. 5843-5848, February 1905.

[48] F. Rashid-Farrokhi, L. Tassiulas, and K.J.R. Liu, "Joint optimal power control and beamforming in wireless networks using antenna arrays", *Technical Report CSHCN T.R. 97-33*, Electrical Engineering and Institute for Systems Research, University of Maryland, USA, June, 1996.

[49] F. Shueh, Wen-Shyen E. Chen, "Code Assignment for IMT-2000 on Forward Radio Link", *Proceedings of the 53rd Vehicular Technology Conference – VTC'01 Spring*, Vol. 2, pp. 906-910, May 2001.

[50] G. Ostermayer, P. Slanina, C. Holzl, C. Meclenbruker, F. Raji, T. Stadler, "Scheduling Performance for UTRA TDD mode", *Proceedings of the IEEE/AFCEA EUROCOMM 2000*, pp. 212-216, May 2000.

[51] G.J. Foschini, Z. M., "A simple Distributed Autonomous Power Control Algorithm and its Convergence", *IEEE Transaction on Vehicular Technology*, Vol. 42, pp. 641-646, November 1993.

[52] H. Haas, S. McLaughlin, "A Dynamic Channel Assignment Algorithm for a Hybrid TDMA/CDMA-TDD Interface Using the Novel TS-Opposing Technique", *IEEE Journal on Selected Areas in Communications*, Vol.19, No.10, pp.1831-1846, October 2001.

[53] H. Holma, A. Toskala, "WCDMA for UMTS: Radio Access for Third Generation Mobile Communications", 2nd Edition, John Wiley & Sons, Ltd., ISBN 0-470-84467-1, p.391, 2002.

[54] H. Holma, G. Povey, A. Toskala, "Evaluation of Interference Between Uplink and Downlink in UTRA/TDD", *Proceedings of the IEEE 50th Vehicular Technology Conference*, Vol.5, pp. 2616-2620, September 1999.

[55] H. Holma, S. Heikkienen, O. Lethinen, A. Toskala, "Interference Considerations for Time Division Duplex Mode of the UMTS Terrestrial Radio Access", *IEEE Journal on Selected Areas in Communications*, Vol. 18, No. 8, pp.1386-1393, August 2000.

[56] H.H. Xia, "A simplified Analytical Model for Predicting Path Loss in Urban and Suburban Environments", *IEEE Transaction on Vehicular Technology*, Vol. 46, No. 4, pp.1040-1046, November 1997.

[57] http://www.3gpp.org – Accessed on December 2003.

[58] http://www.eurescom.de/ - Accessed on December 2003.

[59] http://www.ist-daidalos.org/ - Accessed on February 2004.

[60] I. Forkel, T. Krienchaiyapruk, "Management of Circuit and Packet Switched Data in UMTS Terrestrial Radio Access Networks", *Proceedings of the IEEE International Conference on Third Generation Wireless and Beyond*, San Francisco, USA, May-June, 2001.

[61] I. Forkel, T. Krienchaiyapruk, B. Wegmann, E. Schulz, "Dynamic Channel Allocation in UMTS Terrestrial Radio Access TDD Systems", *Proceedings of the IEEE Vehicular Technology Conference – VTC'01 Spring*, Rhodes, Greece, May 2001.

[62] I. Forkel, X. Jin, "Performance Comparison Between UTRA-TDD High Chip Rate and Low Chip Rate Operation", *Proceedings of IEEE Personal, Indoor, Mobile Radio Communications Conference – PIMRC 2002*, pp. 2102-2106, Lisbon, Portugal, 2002.

[63] I. Katzela, M. Naghshineh, "Channel Assignment Schemes for Cellular Mobile Telecommunication Systems – a Comprehensive survey", *IEEE Wireless Communications*, Vol.3, No. 3, pp.10-31, June 1996.

[64] J. C.-I. Chuang, "Performance Issues and Algorithms for Dynamic Channel Assignment", *IEEE Journal on Selected Area in Communications*, Vol. 11, No. 6, pp. 955-963, August 1993.

[65] J. Choi, "Interference Mitigation using Transmitter Filters in CDMA Systems", IEEE Transaction on Vehicular Technology, Vol. 51, N° 4, pp.939-946, July 2002.

[66] J. K. Petersen, "The telecommunications Illustrated Dictionary - 2nd Edition", *CRC Press*, ISBN 0-8493-1173X, p.1088, 2002.

[67] J. Scourias, "A Brief Overview of GSM", available at http://kbs.cs.tu-berlin.de/~jutta/gsm/js-intro.html - Accessed on December 2003.

[68] J. Zander, "Transmitter Power Control for Co-Channel Interference Management in Cellular Radio Systems", *4th WINLAB Workshop*, New Brunswick, NJ, Oct 1993

[69] J. Zander, "Distributed Co-Channel Interference Control in Cellular radio Systems", *IEEE Transactions on Vehicular Technology*, Vol. 41, No. 3, pp. 305-311, August 1992.

[70] J.Pérez-Romero, R. Agustí, O. Sallent, F. Casadevall, "Packet Transmission strategies to provide Quality of Service in a TDD TD/ CDMA system", *Proceedings of the 12th International Symposium on Personal, Indoor and Mobile Radio Communications – PIMRC'01*, Vol.2, pp.147-151, 2001.

[71] J.S. Blogh and L. Hanzo, "Third-generation Systems and Intelligent Wireless Networking-Smart Antennas and Adaptive Modulation", *John Wiley & Sons*, Ltd, ISBN 0470-84519-8, 2002.

[72] K. Feher, "Wireless Digital Communications: Modulation and Spread Spectrum Applications", *Prentice-Hall, Inc.*, ISBN 0-13-098617-8, p.524, 1995.

[73] K. Kammerlander, "Benefits and Implementation of TD-SCDMA", *Proceedings of International Conference on Communication Technology*, WCC-ICCT 2000, Vol.2, pp. 1013-1016, Aug. 2000.

[74] K. Okada, F. Kubota, "On Dynamic Channel Assignment Strategies in Cellular Mobile Radio Systems", *IEICE Trans. Fundamental*, Vol.E75-A, No.12, pp. 1634-1641, December 1992.

[75] L. C. Godara, "Applications of Antenna Arrays to Mobile Communications, Part I: Performance, Improvement, Feasibility, and System Considerations", *Proceedings of the IEEE*, Vol. 85, No. 7, pp. 1031-1060, July 1997.

[76] L. C. Godara, "Applications of Antenna Arrays to Mobile Communications, Part II: Beam-forming and Direction-of-arrival Considerations", *Proceedings of the IEEE*, vol.85, n0.8, pp. 1195-1245, August, 1997.

[77] L. Chen, S. Yoshida, H. Murata, S. Hirose, "A Dynamic Timeslot Assignment Algorithm for Asymmetric Traffic in Multimedia TDMA/TDD Mobile Radio", *IEICE Transactions on Fundamental*, Vol. E81-A, No. 7, July 1998.

[78] L. Jorguseski, E. Fledderus, J. Farserotu, R. Prasad, "Radio Resource Allocation in Third-Generation Mobile Communication", *IEEE Communications Magazine*, Vol. 39, No. 2, pp.117-123, February 2001.

[79] L.W. Couch II, "Digital and Analog Communication Systems", 5th Edition, *Prentice-Hall*, Inc., ISBN 0-13-522583-3, p. 742, 1997.

[80] Li-Chun Wang, Shi-Ye Huang, Yu-Chee Tsseng, "A Novel Interference-Resolving Algorithm to Support Asymmetric Services in TDD-CDMA Systems with Directional Antennas", Proceeding of the Vehicular Technology Conference – VTC-'02 Spring, Vol.1, pp.327-330, 2002.

[81] M. Chryssoumallis, "Smart Antennas", *IEEE Antennas and Propagation Magazine*, Vol. 42, No. 3, pp.129-136, June 2000.

[82] M. D. Yacoub, "Wireless Technology: Protocols, Standards and Techniques", *CRC Press LLC*, ISBN 0-8493-0969-7, p. 568, 2002.

[83] M. Haardt, A. Klein, R. Koehn, S. Oestriech, M. Purat, V. Sommer and T. Ulrich, "The TD-CDMA Based UTRA TDD Mode", *IEEE Journal on Selected Areas in Communications*, Vol.18, No.8, pp.1375-1385, August 2000.

[84] M. Lindström, "Improved TDD Resource Allocation through Inter-mobile Interference Avoidance", *IEEE Vehicular Technology Conference 2001 Spring*, Rhodes Island, Greece, May 6-9, 2001.

[85] M. M. Silva, A.M.C. Correia, "Interference Suppression using Pre-distortion Filtering and Selective Transmit Diversity", Proceedings of the 4th Conference on Telecommunications-ConfTele'03, June, Aveiro, Portugal, 2003.

[86] M. P. J. Baker, T. J. Moulsley, "Power Control in UMTS Release'99", *Proceedings of the First International Conference on 3G Mobile Communication Technologies*, pp. 36-40, March 2000.

[87] M. Vollmer, M. Haardt, J. Gotze, "Comparative Study of Joint-Detection Techniques for TD-CDMA Based Mobile Radio Systems", *IEEE Journal of Selected Areas on Communications*, Vol. 19, No. 8, pp. 1461-1475, August 2001.

[88] N. Chandran and M. C. Valenti, "Three Generation of Cellular Wireless Systems", *IEEE Potentials*, Vol. 20, no. 1, pp. 32-35, Feb./March 2001.

[89] O. Lethtinen, J. Kurjenniemi, "UTRA TDD Dynamic Channel Allocation in Uplink with Slow Reallocation", *Proceedings of the 57th IEEE Semi-annual Vehicular Technology Conference*, Vol.2, pp.1041-1405, April 2003.

[90] O.Sallent, J. Perez-Romero, R. Agusti, F. Casadevall, "Provisioning multimedia wireless networks for better QoS: RRM strategies for 3G W-CDMA", *IEEE Communications Magazine*, Vol.41, No.2, February 2003.

[91] OPNET Modelling concepts, Vols. I-II, OPNET Technologies Inc., 2000.

[92] P. Cardieri, "Resource Allocation and Adaptive Antennas in Cellular Communications", *PhD Thesis, Faculty of the Virginia Polytechnic Institute and State University*, September 2000, USA.

[93] P. S. Kumar, R. D. Yates, J. Holtzman, "Power Control based on Bit Error Rate (BER) measurements", *Proceedings of the Military Communications Conference – MILCOM'95*, Vol. 2, pp.617-620, 1995.

[94] P.H. Lehne and M. Pettersen, "An Overview of Smart Antenna Technology for Mobile Communications Systems", *IEEE Communications Surveys*, 4th Quarter, Vol.2, No.4, pp.2-13, 1999.

[95] R. Assarut, K. Kawanishi, R. Deshpande, U. Yamamoto, Y. Onozato, "Performance Evaluation of Orthogonal Variable-Spreading-Factor Code Assignment Schemes in W-CDMA", Proceedings *of the IEEE International Conference on Communications*, Vol. 5, pp.3050-3054, April/May 2002.

[96] R. Esmailzadeh, M. Nakagawa, "TDD-CDMA for Wireless Communications", *Artech House*, Inc., ISBN 1-58053-371-X, p.176, 2003.

[97] R. Esmailzadeh, M. Nakagawa, A. Jones, "TDD-CDMA for the 4th Generation of Wireless Communications", *IEEE Wireless Communications*, pp.8-15, August 2003.

[98] R. L. Pickholtz, D.L. Schilling and L.B. Milstein, "Theory of Spread Spectrum Communications – A Tutorial", *IEEE Transactions on Communications*, Vol. COM-30, No. 5, May 1982.

[99] R. M. Bueher, A. G. Kogiantis, Shang-chich Lin, Jiann-an Tsai and D. Uptegrove, "Intelligent Antennas for Wireless Communications – Uplink", *Bell Labs Technical Journal*, Vol. July-September, pp.73-103, 1999.

[100] R. Prasad, W. Mohr and, W. Konhäuser, "Third Generation Mobile Communication Systems", *Artech House publishers*, ISBN 1-58053-082-6, p.387, 2000.

[101] R. Schelb, T. Winter, "Adaptive Switching Point Simulation for Different Traffic Profiles for UTRA-TDD", *Proceedings of the IEEE Vehicular Technology Conference*, pp.992-995, May 2001.

[102] S Moshavi, "Multi-user Detection for DS-CDMA Communications", *IEEE Communications Magazine*, Vol. 34, No. 10, PP. 124-136, October 1996.

[103] S. Bellofiore, C.A. Balanis, J. Foutz and A. Spanias, "Smart-Antenna Systems for Mobile Communication Networks- Part 1: Overview and Antenna Design", *IEEE Antennas and Propagation Magazine*, Vol.44, No. 3, pp. 154-114, June 2002.

[104] S. Bellofiore, C.A. Balanis, J. Foutz and A. Spanias, "Smart-Antenna Systems for Mobile Communication Networks- Part 2: Beamforming and Network Throughput", *IEEE Antennas and Propagation Magazine*, Vol.44, No. 4, pp. 106-114, August 2002.

[105] S. C. Swales, M.A. Beach, D.J. Edwards and, J.P. Mcgeehan, "The Performance Enhancement of Multibeam Adaptive Base-Station Antenna for Cellular Land Mobile Radio Systems", *IEEE Transactions on Vehicular Technology*, Vol.39. N° 1, pp. 56-67, February 1990.

[106] S. Haykin, "Communication System", 3rd Edition, *John Wiley & Sons, Inc.*, ISBN 0-471-57178-8, p. 872, 1994.

[107] S. Heier and M. Malkowski, "UMTS Radio Resource Management by Transport Format assignment and selection", *Proceedings of The 5th International Symposium on Wireless Personal Multimedia Communications – WPMC'02*, Honolulu, USA, October 2002.

[108] S.A. Grandhi, R. Vijayan, D.J. Goodman, J. Zander, "Centralized Power Control in Cellular Radio Systems", *IEEE Transaction on Vehicular Technology*, Vol. 42, No. 4, pp. 466 – 468, November 1993.

[109] S.Dixit, Y. Guo and Z. Antoniou, "Resource Management and Quality of Service in Third-Generation Wireless Networks", *IEEE Communications Magazine*, Vol.39, No.2, pp.125-133, February 2001.

[110] S.H. Marikar and L.A. DaSilva, "Resource Management in Third Generation Mobile Communication Systems Employing Smart Antennas" *Proceedings of the IEEE INFOCOM 2002*, pp. 1461-1469, June 2002.

[111] Simulation kernel, Vols. I-II, OPNET Technologies Inc., 2000.

[112] T. Bao Vu, "Smart Antenna System Architecture and Hardware Implementation", *In Handbook of antennas in wireless communications – Chapter 22,* CRC Press, ISBN 0-8493-0124-6, p.936 2002.

[113] T. Kriengchaiyapruk, I. Forkel, "Adaptive Switching Point in TD/CDMA Systems", *Proceedings of the 56th Vehicular Technology Conference – VTC'02* , Vol. 3, pp.1456-1460, September 2002.

[114] T. Kriengchaiyapruk, I. Forkel, "Dynamic Allocation of Capacity in UTRA-TDD Sytems", *Proceedings of the 2nd International Conference on 3G Mobile Communication Technologies*, pp.262-266, March 2001.

[115] T. Ojanperä, R. Prasad, "An Overview of Air Interface Multiple Access for IMT-2000/UMTS", *IEEE Communications Magazine*, pp.82-95, September 1998.

[116] T. S. Rappaport, "Wireless Communications: Principles & Practice – 2nd Edition", Prentice-Hall PTR, Inc., ISBN 0-13-042232-0, p.707, 2002.

[117] U. Yamamoto, H. Hasanudin, Y. Onozato, "Reconstruction Methods of Tree Structure of Orthogonal Spreading Codes for DS-CDMA", *IEICE Transactions on Fundamentals*, Vol.E83-A, No. 11, November 2000.

[118] V. K. Garg and, J. E. Wilkes, "Wireless and Personal Communications Systems", *Prentice-Hall, Inc.*, ISBN 0-13-234626-5, p.445, 1996.

[119] W. Song, J. Lim, "Power Control with Fast Convergence for Wideband CDMA", IEICE *Transaction on Communications*, Vol. E85-b, No. 6, pp.1206-1208, June 2002.

[120] W.C.Y. Lee, "Mobile Cellular Telecommunications", 2nd Edition, *McGRAW-HILL International Edition*, ISBN 0-07-038089-9, p.664, 1995.

[121] W.C.Y. Lee, "Overview of Cellular CDMA", IEEE Transaction on Vehicular Technology, Vol. 40, N° 2, pp.291-302, May 1991.

[122] W.C.Y. Lee, "The Most Spectrum-Efficient Duplexing System: CDD", *IEEE Communications Magazine*, pp. 163-166, March 2002.

[123] W.S. Jeon, D. G. Jeong, "Comparison of Time Slot Allocation Strategies for CDMA/TDD Systems", *IEEE Journal on Selected Areas in Communications*, Vol. 18, No. 7, pp. 1271-1278, July 2000.

[124] www.arrows-ist.upc.es - Accessed on December 2003.

[125] X. Lagrange, Ph. Godlewski, A. G. Acx, C. Mihailescu, "Dynamic Resource Allocation in Locally Centralized Cellular Systems", *Proceedings of the IEEE Vehicular Technology Conference*, Ottawa, Canada, May, 1998.

[126] Y. Argyropoulos, S. Jordan; S. P. R. Kumar, "Dynamic Channel Allocation in Interference-Limited Cellular Systems with Uneven Traffic Distribution", *IEEE Transaction on Vehicular Technology*, Vol. 48, No. 1, January 1999.

[127] Y. Cao, B. Zhou, C. Li, "A Novel Allocation Scheme to Enhance Resource Utilization in CDMA/TDD", Proceedings of the International Conference on Communication Technology, Vol. 2, pp. 821-824, April 2003.

APPENDIX A

This appendix provides, for the purpose of specification and validation of DCA algorithms, a description of UTRA-TDD system level simulators. The strategy adopted in the simulator design, its architecture and main functions are described in detail.

The UTRA-TDD Simulator was designed with the goals of allowing an accurate simulation of the critical UTRA-TDD mechanisms, and at the same time achieving a high efficiency in terms of simulation time. Therefore, only the features that have a strong impact on the algorithms to be simulated were considered with a high level of detail.

For the above reasons, link level simulation[24] is based on a simple model of the air interface that allows obtaining bit and block error statistics, which are used at the system level by the RRM algorithms. On one hand the model considers an accurate representation of the mapping of transport channels onto physical channels, channel coding and rate matching. On the other hand, it is based on a number of simplifying assumptions in what concerns interference, namely intra-cell interference is assumed negligible and inter-cell interference is based on a Gaussian model.

The system level simulator is focused on the distinctive features of UTRA-TDD, that is, the organization of frames into timeslots, for the purpose of resource allocation, and exploitation of Dynamic Channel Allocation mechanisms. The use of an unpaired band and the natural traffic asymmetries between uplink and downlink are also taken into account, due to their impact on the efficient use of resources. Therefore, the simulator was optimised with these specific goals in mind.

The system level simulator uses the simulation platform provided by the OPNET™ tool, which offers a flexible environment to create simulation scenarios, which includes traffic generation and mobility models, as well as statistics and animations.

A.1 - System Level Simulator

A.1.1 - Introduction

The UTRA-TDD system level simulator was developed to assist in the evaluation of the DCA strategies and algorithms proposed in the previous chapters.

The emphasis of the UTRA-TDD simulator was on the distinctive features of UTRA-TDD, that is, the organization of the frames into timeslots, for the purpose of resource allocation, and the Dynamic Channel Allocation (DCA) mechanisms.

[24] This appendix is not intented to provide a description of link level simulator, only system level simulator will be decribed. Details about link level simulator can be found in ARROWS D17 Deliverable, available at www.arrows-ist.upc.es.

The strategy adopted in the design of the simulator was based on two main requirements as mentioned before:

- An accurate and detailed representation of the specific UTRA-TDD mechanisms, while those mechanisms with a minor impact on the resource allocation strategies were somehow simplified;
- A high efficiency in the execution of simulation runs, reducing as much as possible the overheads associated with both the processing of a high number of events and the interprocess communication mechanisms.

The architecture of the simulator was optimised to fulfil the above requirements, as described in the next sections. The system level simulator uses the simulation platform provided by the OPNET tool, which operates at three different levels: network level, node level and process level. As pointed out before a brief description of the simulator was given in chapter 5, in that way the main emphasis that will be given in this appendix is aimed to detail of node and process levels.

A.1.2 – User Equipment node

A1.2.1 – Attributes definition

The UE node simulates the behaviour of a User Equipment entity. The list of attributes that can be specified when configuring the UE node for each scenario to be simulated is the following:

- UE_id: Identifier of the UE; it should be between 0 and MAX_UE.
- Trajectory: Name of the pre-defined trajectory the UE follows.
- speed: Mobile speed in km/h. This attribute should be specified according to the defined trajectory.
- Ptxmax: Maximum transmitted power (dBm).
- Ptxmin: Minimum transmitted power (dBm).
- service: Service that this user is receiving: conversational, streaming, interactive (WWW) or best effort (e-mail).
- conv_gen parameters: parameters of the conversational traffic model.
    - Mean call duration (s)
    - Mean time between calls (inter-call time) (s)
    - Data rate (bit/s); service assumed Constant Bit Rate (CBR)
- strm_gen parameters: parameters of the streaming traffic model.

- Base layer data rate (bit/s)
- Enhancement layer data rate (bit/s)
- Mean time between sessions (inter-session time) (s)
- Mean session duration (s)

- www_gen parameters: parameters of the WWW traffic model.
  - Inter-arrival packet time (avrg_intarrvl_time) (s): Average time between packet arrivals in a page.
  - Average number of packets per page (avrg_num_pkt_calls)
  - Average number of packets per page (avrg_num_of_packets)
  - Reading time (s): Average time between pages in a session.
  - Time between sessions (inter-session time) (s) (average value)
  - alfa, k: parameters of the Pareto distribution to define the packet length
  - m: maximum packet size (bytes)
- email_gen parameters: parameters of the e-mail traffic model.
  - Mean arrival rate: (mails/h)
  - Time between sessions (inter-session time) (s) (average value)
  - alpha_off, kappa_off: parameters of the model defining the duration of the OFF period between emails
  - c1_no_attach, k1_no_attach: parameters of the Weibull distribution that computes the size of an email message without attachments.
  - c2_attach, k2_attach: parameters of the Weibull distribution defining the size of an email message with attachments.
  - prob_new_msg: probability of a newly arrived message being read by the user

A.1.2.2 – Processes description

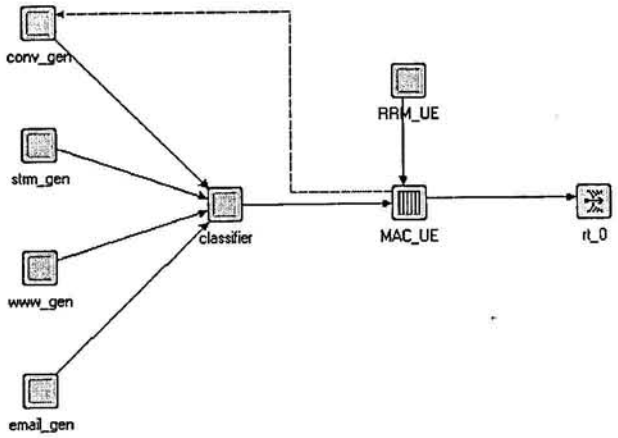

Figure A. 1 - User Equipment node model

Figure A. 1 presents the processes that constitute the UE node and their relationships. There is one OPNET defined module: the radio transmitter (*rt_0*), which is responsible for the transmission of the packets through the radio interface. On the other hand, the functions described in chapter 5 are carried out by seven user-defined processes: the four traffic generators (*conv_gen, strm_gen, web_gen* and *email_gen*), the *MAC_UE* process, the *RRM_UE* process and the classifier process. Processes are connected through packet streams that allow interprocess communication by means of OPNET packets. Downlink transmissions are not handled by the UE node, as explained.

Figure A. 2 shows the state machine for the *MAC_UE* process. After the initialisation state (*init*) invoked at the beginning of the simulation, the process goes into the idle state waiting for different interruptions. There are two possible interruptions:

- PK_ARRIVAL: A packet coming from any of the uplink traffic generators is received. According to its size and the parameters of the respective radio access bearer, the packet is divided into as many transport blocks (TBs) as necessary for its complete transmission by the physical layer. The original packet is discarded and will be reconstructed on the RNC node, using the information carried by the TBs.
- FRAME: this is a regular interrupt issued by the simulator's kernel to the MAC_UE process. The period of this interrupt is the duration of the UMTS frame, 10 ms. At every frame the MAC_UE de-queues the TBs and transmits them through the air interface. This operation is done according to the TTI of each service and to the information that comes from the RRM_UE process about the MAC (re)configuration.

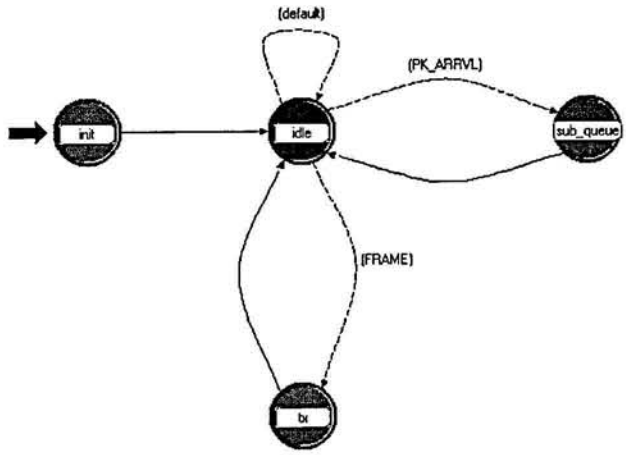

Figure A. 2 - MAC_UE process model

Figure A.3 represents the state machine of the *RRM_UE* process model. After initialisation the process remains in an idle state until any interruption arrives. At this stage, there are two possible interrupts that are handled by this process:

- REMOTE: this is a remote interrupt that is sent by the RNC node. It was decided to use the remote interrupt since it is possible to associate with this type of interrupts a simulation entity called *Interface Control Information* (ICI). An ICI is a structured collection of data which is transferred between processes, as a form of inter-process communication. It is an alternative to a packet delivery between nodes. The ICI contains the information needed for MAC configuration. This information is then kept in global variables that are read by the MAC_UE process every 10 ms.
- REGULAR: The regular interrupt is used in the context of power control. On every frame, it checks the power transmitted by the user equipment and writes it into a record for statistical analysis.

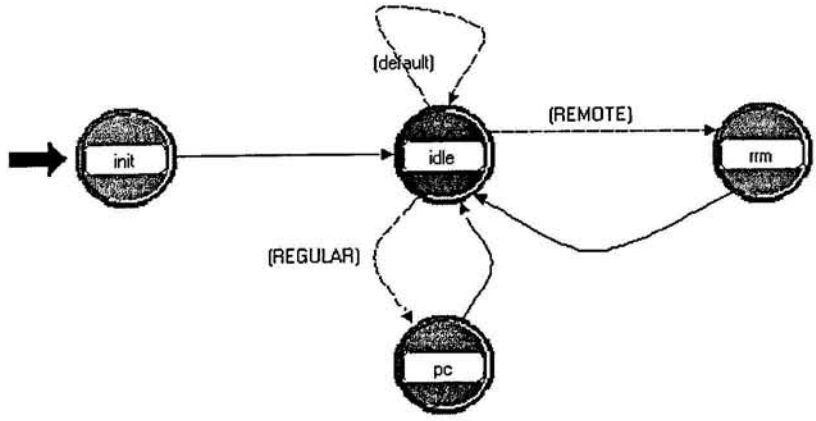

Figure A.3 - RRM_UE process model

Figure A.4 is a model of the classifier process, which is an intermediate process between the traffic generators and the *MAC_UE* process. Its main task is finding out to which service each packet belongs to, mark it according to the service and send it to the *MAC_UE* process for proper queuing. This process is also used to keep track of some statistics such as the number of packets generated per service by each user.

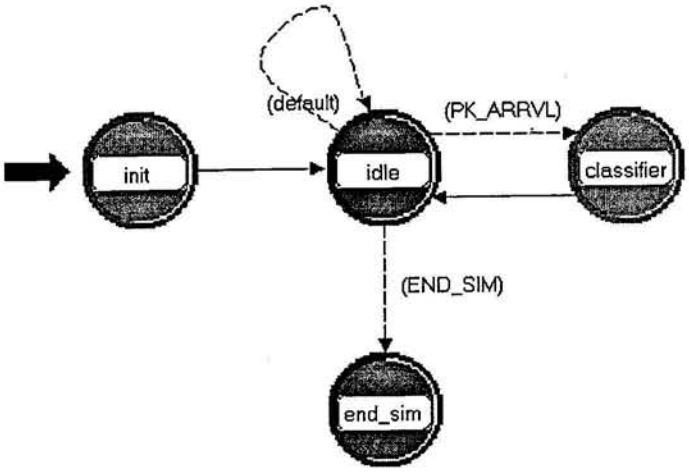

Figure A.4 - Classifier process model

Figure A.5 and Figure A.6 represent the state machines of the conversational and streaming services, respectively. These state machines are identical, because both services are assumed to be CBR. Streaming is modelled by a base layer and an enhancement layer, that produce two independent streams with bit rates held constant during a connection. Two different flows are produced by the streaming generator if both layers are admitted into the system. In this work the bit rate of the enhancement layer is selected at call set-up among a set of fixed values, while the base layer has a fixed value of 32 kbit/s; however, in the latter case, selection of a value was left as an attribute of the streaming generator, for the sake of generality of the simulator.

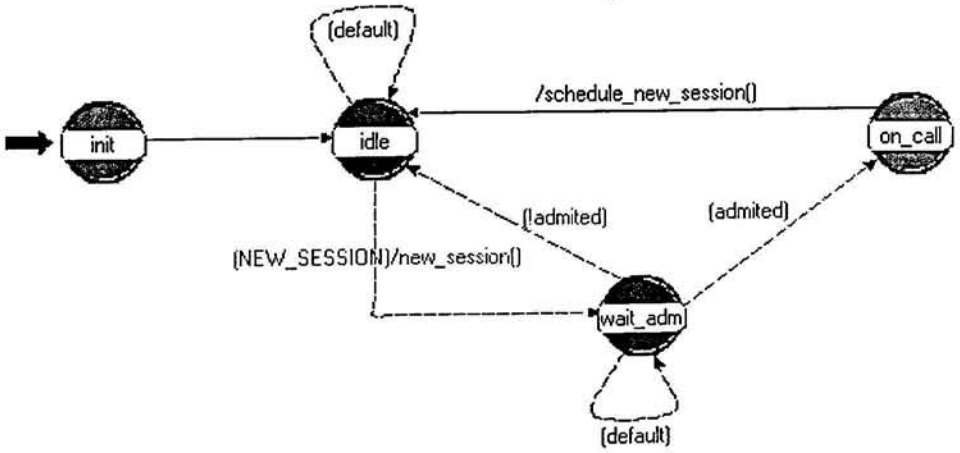

Figure A.5 - Conversational generator process model

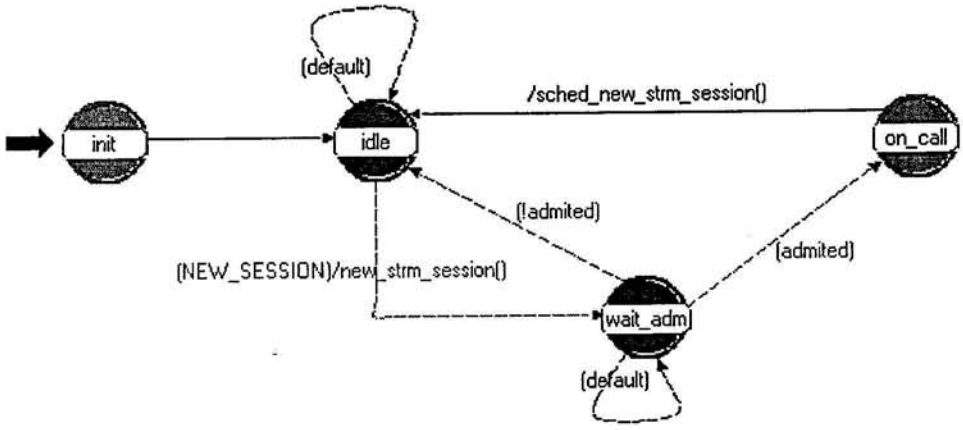

Figure A.6 - Streaming generator process model

Figure A.7 shows the WWW generator process. After initialisation the system goes idle until a NEW_SESSION interrupt is generated. The NEW_SESSION interrupt is generated according to a Poisson distribution that models the arrival of new web sessions initiated by this user. The process goes then to a state where it awaits for admission from the system. If admitted, it initiates a packet call; if not, it returns to the idle state. When in a packet call, the process generates packets according to the packet arrival statistics until the page is completed. In the period between two consecutive packet arrivals, the process is in the inter-arrival state. When a packet call is finished, the system goes to the reading time state. If there are no more packet calls in the session, it goes back to the idle state; otherwise a new packet call starts after some time.

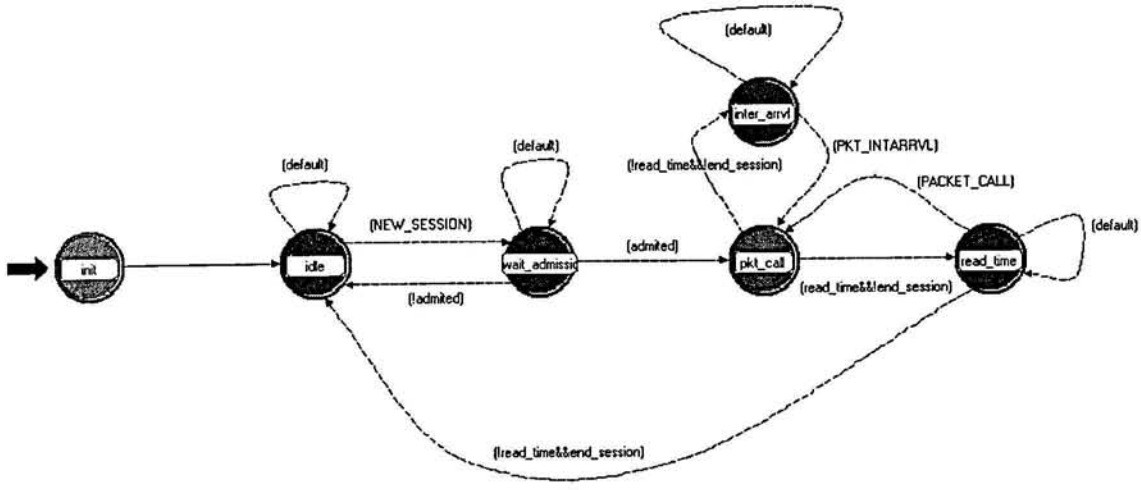

Figure A.7 - Web generator process model

Figure A.8 shows the email generator process. This state machine models the hybrid email service, which is an ON-OFF traffic model. The arrival of a new email session to the system, initiated by this user, is modelled by a Poisson process. After initialisation, the system goes into an idle state. When a NEW_SESSION interrupt arrives, the process enters the ON state, which corresponds to the downloading of a message from the mailbox. When the message is downloaded, the system enters the OFF state that corresponds to the user's reading time. After some time, the user

downloads another message, which corresponds to a new ON period. The process moves between the ON and OFF states until all emails are downloaded from the mailbox, or the user chooses not to read any more messages.

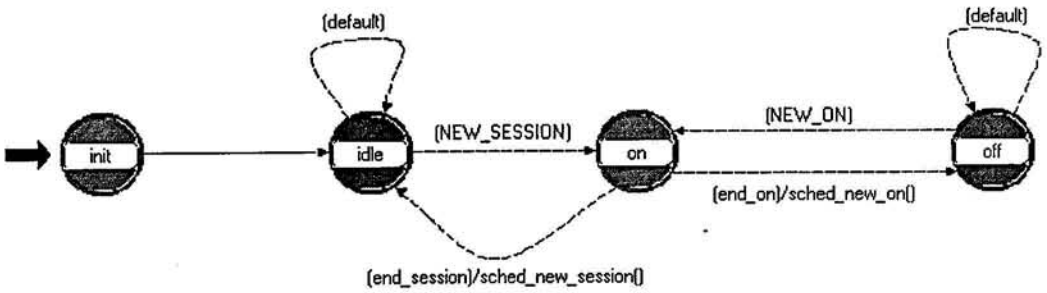

Figure A.8 - Email generator process model

A.1.3 – Base Station node

A.1.3.1 – Attributes definition

This node simulates the essential behaviour of a Base Station. It is connected on one side to the RNC node and on the other to the radio interface. Its function is the reception of uplink data and control packets from the UE nodes and delivery to the RNC node for processing.

For simplicity and efficiency in the simulator design, there are some functions of the Base Station that are simulated in the RNC node.

The attributes that can be defined by the user for each BS node are the following:

- BS_id: Identifier of the Base Station. This should be an integer value different for each BS in the system.
- BS coordinates (x position, y position): they represent the geographical location of the BS node in the scenario.
- BS_Ptxmax: Maximum transmitted power (dBm).

A.1.3.2 – Processes description

Figure A.9 shows the processes that constitute the BS node and their relationships. There is one OPNET process responsible for the reception of the packets through the radio interface; this is the radio receiver (NodeBrx). Similarly, there is one OPNET process responsible for the transmission of packets to the *RNC* (NodeBtx). Finally, there is a user defined process, the main process, responsible for controlling the packets that pass through the BS. The state transitions of this process are shown in Figure A.10. There are two types of interruptions to the process depending on the direction of the packet that is being processed:

- FRAME: this interrupt is remotely sent by the last user that places some information on the current frame. It is responsible for the synchronization of the base station, which means that the base station receives it every 10 ms (UMTS frame duration).
- END_SIM: this interrupt is received by the Base Station when the simulation ends. The Base Station uses it to collect some statistical values, like the total number of packets received by this node.

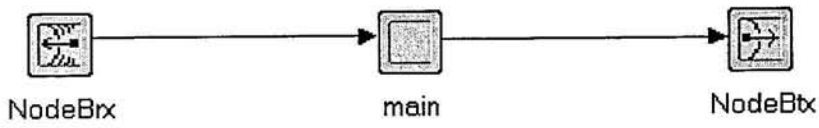

Figure A.9 - – Base Station node model

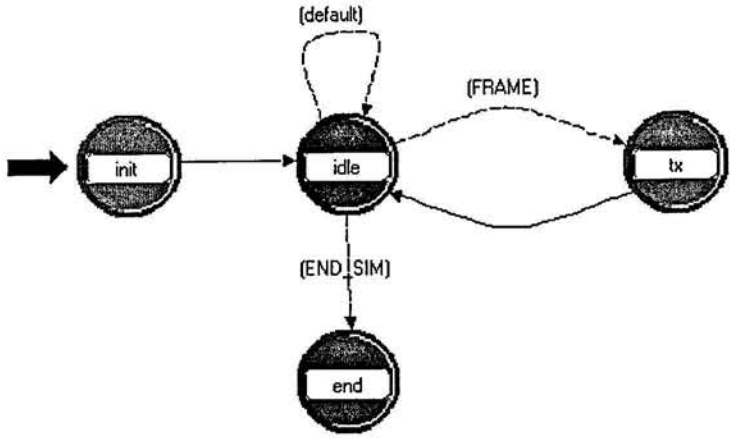

Figure A.10 - Base Station process model

A.1.4 – RNC node

A.1.4.1 – Attributes definition

This node simulates a set of functions related with the RRM algorithms, specially the DCA algorithms: In the UTRA-TDD mode the DCA algorithm is of outmost importance. Two types of DCA are carried out in the RNC: the slow and fast DCA. On real systems, fast DCA is performed by the base stations. However, since it is based on a cell-related preference list computed by the slow DCA in the RNC, it was decided to place it on the RNC to simplify the simulator. In this way, the amount of data exchanged between the RNC and the BS can be highly reduced.

Synchronization of the UTRA-TDD simulator is achieved by asking the kernel to send an interrupt (a regular interrupt) to all nodes every 10 ms. This approach has the advantage of relieving the RNC of the burden of having to check the list of admitted users every 10 ms but, on the other hand,

invokes users that may be idle. These users have to check if they are allowed to transmit and, in the negative case, just go back idle.

The following list of attributes allows the configuration of the RNC node and includes some general features of the simulator:

- Link Layer Directory: Path to the directory containing the files with the link layer simulator results.
- Admission. Admission TFC UL / DL: TFC to be considered in the admission control for the different services in UL and DL.
- Admission. Admission margin (dB): When the initial admission control is not successful in the preferred BS (i.e., the one with the highest pilot E_c/I_0), the algorithm will try the next preferred BS only if its pilot E_c/I_0 is higher than the highest E_c/I_0 minus the Admission margin.
- Time Outer Loop (s): Time between consecutive updates of the Outer Loop power control.
- Outer Loop Function: Function that specifies the variation of the E_b/ N_0 target as a function of the average selected TFC. The current simulator considers two possibilities: linear variation or step variation.
- Congestion. Congestion Resolution Algorithm: It allows the selection of the Congestion Algorithm to be tested.
- Congestion. Time to trigger: Duration in seconds of the congested period before triggering the congestion resolution algorithm.
- DCA_algorithm: parameter that allows the user to choose the desired DCA algorithm. Possible alternatives are: OD (Ordered Distribution), TA (Time Advance) and PL (Path Loss measurement).

A.1.4.2 - Processes description

Figure A.11 shows the processes that constitute the RNC node and their relationships. Many receivers connect the RNC node with the BSs node. There are yet five user defined processes, namely the TD/CDMA process, the classifier process, the CAC process, the DCA process and the handover and power control process, which carry out the described functions. The detailed description of each process follows.

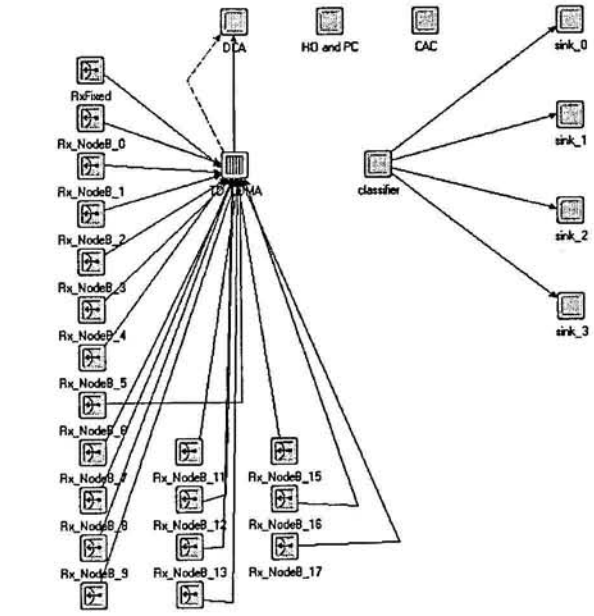

Figure A.11 - RNC node model

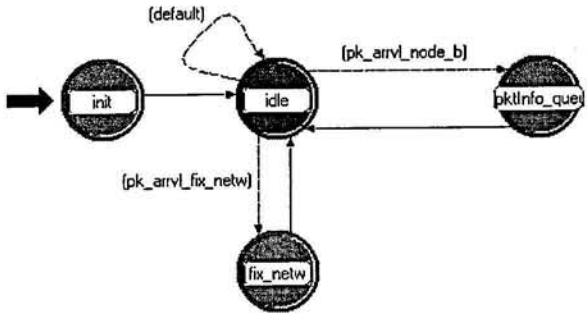

Figure A.12 - TD/CDMA process model

Figure A.12 shows the TD/CDMA process model. This is the peer entity of the MAC_UE process. Its main function is to receive the transport blocks from the BS and to reconstruct the packets that should then be sent to their final destination. This is done by inspecting the transport block's flag field which, when set to 1, indicates that the current TB is the last TB of a certain packet. When this TB arrives, the remaining TBs are de-queued, the packet is reconstructed and sent to the destination. The main type of interruption is:

- PK_ARRVL_NODE_B: after initialisation the process is in an idle state until any TB arrives from the BS. When the TB arrives, the process goes to the TDMA_queue state, where the TB block is queued until the corresponding packet can be reconstructed (which happens when the TB corresponding to the same packet and with the flag field set to 1 arrives).

Figure A.13 shows the model of the classifier process. This process is responsible for checking the packet's service type and sending it to the corresponding sink process. When the first packet arrives from the TD/CDMA module, the classifier makes some initialisation, classifies this packet

according to the service type, forwards it to the destination and goes to an idle state. Every time a new packet arrives, the classifier goes from the idle to the classifier state and then back to the idle state.

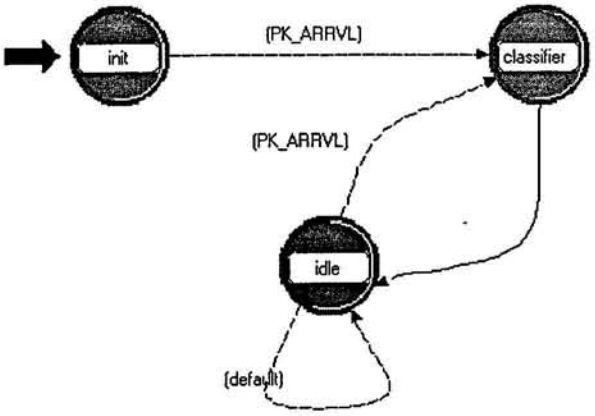

Figure A.13 - classifier_RNC process model

The CAC process model, shown in Figure A.14, is the process responsible for admitting new calls on the system. Every user that wishes to start a new non-best effort session sends a call admission control packet to the RNC. This packet triggers the admission control algorithm. Depending on the network load, this process sends a positive or negative reply control packet back to the user. If the session is admitted, then the control packet should contain the RAB information, namely the maximum allowed transport format (TF) and corresponding spreading factor that should be used. Admittance of any session triggers the DCA algorithm for proper channel allocation to the new session.

After initialisation the process goes to the idle state. Whenever a call admission control packet is delivered to this module by any user, the process changes to the *cac* state where it runs the admission control algorithm and sends another call admission control packet back to the user.

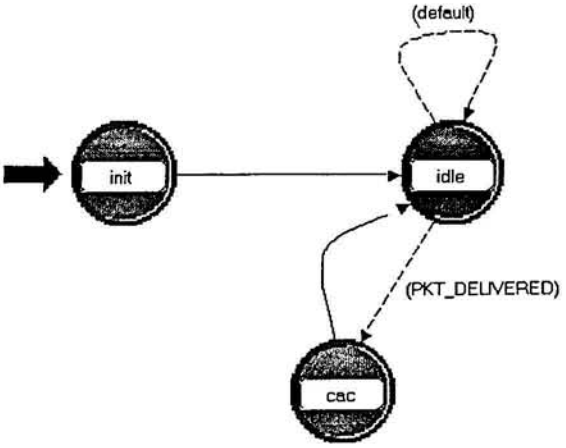

Figure A.14 - Call Admission Control process model

The DCA process is the "heart" of the UTRA-TDD mode and consequently of this simulator. Figure A.15 shows the DCA process model. After initialisation, the process goes into an idle state. When in this state, two interrupts can be received:

- BEG_SIM: this interrupt is sent by the simulator's kernel at the beginning of the simulation. The process changes to the deliver state which will configure the uplink/downlink asymmetrical distribution of the time slots in the TDD frame.
- REGULAR: this is a regular interrupt sent by the simulator's kernel. Its task is to trigger the DCA algorithm to run every 10 ms. In real systems this corresponds to slow DCA.

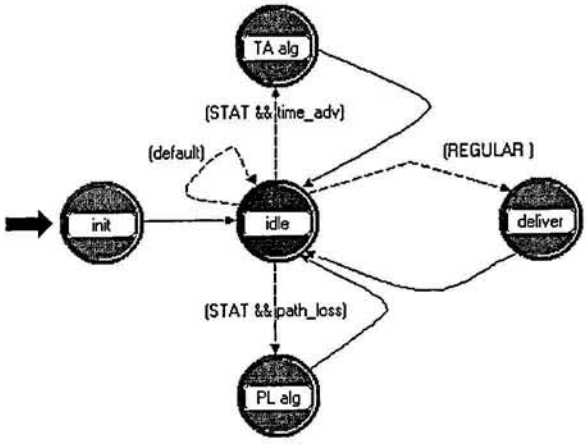

Figure A.15 - Dynamic Channel Allocation process model

The results of the DCA algorithm are placed on an OPNET tool named Interface Control, which can be read by the user equipments (i.e., by the RRM module of the UEs) to get the information about the maximum transport format that can be used on the next frame and about their channel allocation within the frame.

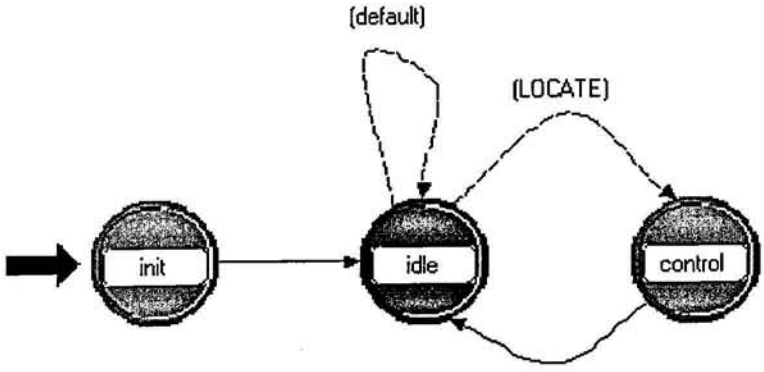

Figure A.16 - Handover and Power Control process model

Figure A.16 shows the handover and power control process model. Handover in TDD is hard-handover which means that no parallel connections are established between an UE and the receiving BSs. Therefore, handover in UTRA-TDD is just a matter of measuring the power

received by the base stations from a specific user and choosing the BS that receives the strongest signal. In this way, handover and power control are closely related in UTRA-TDD and this is the main reason why they are implemented in the same module. Every time the process receives the LOCATE interrupt, it measures the path loss for a certain user, measures the received power and computes the SIR. Then it compares the SIR to the SIR target and instructs the mobile to increase or decrease its power. The LOCATE interrupt is a regular interrupt sent by the kernel.

A.2 - Interaction between the different processes

In this section, the communication mechanisms between the different OPNET processes are presented.

Most OPNET models can be classified as distributed systems composed of multiple subsystems that interact with each other. The interactions between subsystems rely on communications resources to support exchanges such as commands, queries, and general information. Communication may be required between subsystems that are physically distinct as well as between those that are logically separated based on their functional areas. OPNET provides several communication mechanisms to address the range of needs required by sophisticated applications. The UTRA-TDD system-level simulator uses two different communication mechanisms: Packet based communications and Interface Control Information (ICI).

A.2.1 – OPNET defined packets

A.2.1.1 – Traffic packets

On Figure A. 1 (UE node model) one can see the four traffic generators and their output packet streams connecting the generators to the classifier module. From the classifier module, there is another output packet stream connecting this module to the MAC_UE module. Four different types of packets flow through these packet streams, corresponding to the four different services. These packets are known as:

- *Arrows_conv*;
- *Arrows_strm*;
- *Arrows_www*;
- *Arrows_email.*

These packets have a similar structure. They contain the following main fields:

- usr_id: The identification of the user equipment that generated the packet;
- pkt_id: A sequential number that uniquely identifies this packet;
- src_id: The identification of the traffic source that generated the packet;

- size: the packet size. OPNET provides means to allocate "real" sizes to packets by setting the size of the packet's header fields and payload. This is useful when the object of study is the packet's transmission/reception time, the propagation delay, collisions, etc. Since in this work is not interested in these aspects of packet switching, zero-sized packets and a size header field have been used, as explained in chapter 5. The size header field is used to carry the number of transport blocks that each packet is composed of;
- layer: only applicable for streaming packets. Streaming is modelled by two CBR flows that constitute a base and an enhancement layer. This field indicates to which layer the packet belongs to.

A.2.1.2 – Transport Blocks

The traffic packets are divided in Transport Blocks (TBs) by the MAC_UE module. The generated TBs follow the specification of their service's Radio Access Bearer (RAB). For example, the size of a TB, depending on the service, is as follows:

- 640 bits for the conversational service;
- 320 bits for the remaining services (streaming, www and email).

The TBs are the entities that are transmitted through the air interface (from the user equipment to the base station). The BS retransmits the TBs to the RNC, through a point-to-point link, where they are delivered to the TD/CDMA module. The TD/CDMA module "reconstructs" the packet and sends it for processing by the classifier module.

The TBs contain the following main fields:

- pkt_id: The identification of the traffic packet the TB corresponds to;
- seq_no: the sequence number of the TB. A traffic packet is divided into n TBs. These are numbered 1 to n. This number helps in the packet's reconstruction at the RNC;
- flag: when set to 1, the flag indicates that the current TB is the last TB that corresponds to a certain pkt_id;
- user_id: The identification of the user the TB (traffic packet) belongs to;
- serv_id: The TB corresponds to a traffic service indicated in this field.

A.2.1.3 – Call Admission Control Packets

These packets are exchanged between the traffic generators in the UE node and the Call Admission Control module in the RNC. They request the establishment of a session of a certain type and with certain attributes. There is one packet model for each type of service that requires admission (which

excludes the best effort service). The packet's names are: *conv_cac, strm_cac, www_cac.* They contain the following fields:

- usr_id: the identification of the user that is making the request;
- serv_id: the indication of the service that is trying to establish a new session;
- primitive: indicates the type of message the packet represents. The primitives can be: REQUEST, ANSWER_YES and ANSWER_NO;
- enh_rate: only exists in the strm_cac packet (streaming service). It indicates the maximum data rate allowed for the enhancement layer. It is sent from the RNC to the user that requested the session and is only valid for packets with the ANSWER_YES primitive.

A.2.2 – Interface Control Information

The ICI package is a collection of Kernel Procedures concerned with the ICI simulation entity, which is an acronym for *Interface Control Information.* An ICI is a structured collection of data, which is transferred between processes, as a form of inter-process communication. An ICI becomes associated with an interrupt if a process installs the ICI prior to taking the action that causes the interrupt. Layered protocol interfacing is the main application of ICIs, but they can also be used to associate information with sophisticated self interrupts or peer-to-peer remote interrupts.

The UTRA-TDD simulator uses the ICI package for peer-to-peer communication between the DCA module in the *RNC node* and the RRM_UE module in the UE, respectively. The structured information contained in the ICI refers to the maximum allowed transport format that can be used by a given session of a given service. In this case, the contents are:

- conv_TF: maximum allowed TF for the conversational service;
- strm_base_TF: maximum allowed TF for the base layer of a streaming session;
- strm_enh_TF: maximum allowed TF for the enhancement layer of a streaming session;
- www_TF: maximum allowed TF for the WWW service;
- email_TF: maximum allowed TF for the email service.

There is also an additional parameter, Frame_nr. The RNC counts the number of frames since the beginning of the simulation and sends this number to the UEs to help in the computation of the Time Transmission Interval (TTI) of each service.

A.2.3 – Communication between different processes

In this section the procedures that enable the communication between the different OPNET processes of the simulator by making use of the previously defined packets are explained. The

important procedures to take into account are those dealing with radio transmission and those related with session establishment and release, where several nodes are involved.

A.2.3.1 – Radio Transmission / Reception procedures

This procedure allows sending the different information packets through the air interface as well as informing about the successful transmission by means of acknowledgement packets. The uplink transmissions are carried out by the MAC_UE process of the UE nodes when they receive a periodic self-interruption from the simulator's kernel, signalling the frame. As explained before, all the downlink sessions are terminated at the RNC, which means that there is no packet transmission (and no communicating processes) in the downlink direction. In this direction, the required information is carried out by means of an ICI.

A.2.3.2 - Session establishment and release procedures

The processes involved in these procedures are:

- the generators of uplink services in the UE nodes ;
- the Call Admission Control (CAC) module in the RNC;

Considering the services that must request admission into the system (conversational, streaming and interactive classes), only the conversational service is a truly bi-directional service. This means that when a user of a conversational service (up or downlink) wants to start a session, it needs to request admission to the RNC, which, if willing to admit the session, has to indicate to the destination user that a session should also be started from his side.

Streaming and interactive services need not start a "peer" session from the destination user, due to their non bi-directional behaviour. Therefore, the signalling for session initiation is much simpler and it only involves the exchange of the call admission control packets described before. The communicating entities in this case are the packet generators and the call admission control module. The communication mechanism that is used is known as packet delivery. This mechanism allows any processor or queue module to directly transfer packets to any other processor or queue module, regardless of their physical location and without being directly connected.

A.3 - Available Statistics

The UTRA-TDD system level simulator provides the user with different types of statistics devoted to evaluate and compare performance of the RRM algorithms under different scenarios. Following OPNET nomenclature, there are three generic types of results: scalar statistics, vector statistics and animations. They are described in this section.

A.3.1 – Scalar statistics

Scalar statistics are a means of obtaining the value of certain performance measurements as a result of a simulation run. These statistics are automatically collected by the simulator. The statistics that are available on the current version of the simulator are the following ones:

A.3.1.1 - Transmission statistics:

- Average Delay (s): This is the average transmission delay of a message. It is measured as the difference between the time when the message is completely transmitted and the time when it was generated. This statistic is available separately for all the service classes and for uplink and downlink.
- Jitter of the Delay (s): This is the standard deviation of the message transmission delay. It is available for all the service classes and for uplink and downlink.
- Rate (bit/s): This statistic provides the average bit rate achieved during the service periods. For WWW it is calculated forth ON periods during page receptions. It is computed as the ratio between the total number of received/transmitted bits and the duration of the period. It is available for all service classes.
- Jitter of the Rate (bit/s): Standard deviation of the bit rate during ON periods. Available for all the service classes and for uplink and downlink.
- Packet rate (bit/s): Average bit rate for the transmitted messages. It is computed as the ratio between the message length and the message transmission delay. Available for all the service classes and for uplink and downlink.
- Throughput (bit/s): It is computed as the ratio between the total number of successfully transmitted bits and the simulation time. Available for all the service classes and for uplink and downlink.

A.3.2 - Vector statistics

These statistics provide a means of observing the time evolution of certain parameters and measurements during a simulation run. These statistics should be specified by the user. They essentially store the set of samples for the measured statistic together with the instant when the measurement is carried out. Similarly, it is possible to obtain statistical distributions (histograms, pdfs, averages, etc.) of these parameters. Not all the available statistics are collected in all the simulations. Only those that are selected by the user when the simulation is specified. Each vector statistic is associated with a different node and process. In the simulator, the available vector statistics are:

In the UE node:

- Generated_packets: For each traffic generator, the size of each generated packet is collected.
- Tx Power: Power transmitted by UE node in the uplink.

In the BS_node:

- Load UL BS: Evolution of the uplink load factor for the base station.
- Load DL BS: Evolution of the downlink load factor for the base station.

In the RNC_node:

- As mentioned before, some functions of BS and UEs are, for simplification of simulation, carried in the RNC. As a consequence, it is important to mention that the powers of BS and UEs are calculated in the RNC. These results are generated in text file which is further manipulated in the MS EXCEL and, all graphs that have been shown in this thesis are also generated from these text files.

A.3.3 - Animations

Finally, the last type of results that the simulator provides are the OPNET animations. They consist of recording an evolution of specific simulation parameters and observing them by means of the *op_vuanim* utility. This aspect is especially useful when trying to relate in a graphical way specific events with mobile positions (handover, transmitted power, etc.).

There are three types of events that can be recorded as animations:

- Subnet animation: It records the position of the UE nodes along the simulation depending on the specific trajectories. Similarly, the packets that are exchanged between the different nodes are also shown.
- Statistic animation: All the previously defined vector statistics can also be recorded in an animation.
- Custom animation: This feature allows the visualisation of the contents of the OPNET packets that are exchanged between the different nodes.

APPENDIX B

This appendix lists the tables of relevant values for the six allocation combinations (scenarios presented in section 5.4.1) within one timeslot in both cells. All values presented in the tables are in decibels.

B.1 - Uplink timeslots

	Ptx_o	Ptx	I_o(other cell)	I(other cell)	$I_{(total)}$
UE3	17.406	17.407	-114.429	-114.428	-111.428
UE2	17.406	17.407	-114.429	-114.428	
UE4	-2.310	-1.700	-141.736	-141.126	-138.116
UE1	-2.310	-1.700	-141.736	-141.126	

Table B. 1- UE powers and interferences for scenario 1

	Ptx_o	Ptx	I_o(other cell)	I(other cell)	$I_{(total)}$
UE3	-2.310	-1.994	-141.736	-141.420	-138.726
UE2	-2.310	-1.994	-141.736	-141.420	
UE4	-2.308	-2.308	-141.736	-141.735	-114.421
UE1	17.406	17.407	-114.429	-114.428	

Table B. 2 - UE powers and interferences for scenario 2

	Ptx_o	Ptx	I_o(other cell)	I(other cell)	$I_{(total)}$
UE3	17.406	17.747	-141.429	-114.088	-114.080
UE2	-2.310	-1969	-141.736	-141.395	
UE4	-2.310	-1.969	-141.736	-141.395	-114.080
UE1	17.406	17.747	-114.429	-114.088	

Table B. 3 - UE powers and interferences for scenario 3

	Ptx_o	Ptx	I_o(other cell)	I(other cell)	$I_{(total)}$
UE3	17.406	17.772	-114.429	-114.088	-111.419
UE2	17.406	17.772	-114.429	-141.395	
UE4	-2.310	-1.650	-141.736	-141.736	-114.421
UE1	17.406	18.065	-114.429	-114088	

Table B. 4 - UE powers and interferences for scenario 4

	Ptx_o	Ptx	I_o(other cell)	I(other cell)	$I_{(total)}$
UE3	17.406	18.115	-114.429	-113.720	-110.710
UE2	17.406	18.115	-114.429	-113.720	
UE4	17.406	18.115	-114.429	-113.720	-110.710
UE1	17.406	18.115	-114.429	-113.720	

Table B. 5 - UE powers and interferences for scenario 5

	Ptx_o	Ptx	I_o(other cell)	I(other cell)	$I_{(total)}$
UE3	-2.310	-2.308	-141.736	-141.735	-138.725
UE2	-2.310	-2.308	-141.736	-141.735	
UE4	-2.310	-2.308	-141.736	-141.735	-138.725
UE1	-2.310	-2.308	-141.736	-141.735	

Table B. 6 - UE powers and interferences for scenario 6

B.2 - Downlink timeslots (Base Station 1)

	Cell 1 (Ptx)			Cell 2 Interference	
	BS1 – UE3	BS1 – UE2	Total	BS1 - UE1	BS1 – UE4
Initial value	21.906	21.906	24.916	-113.870	-113.870
Final Value	21.921	21.921	24.931	-113.854	-113.854

Table B. 7 - BS1 powers and interferences for scenario 1

	Cell 1 (Ptx)			Cell 2 Interference	
	BS1 – UE3	BS1 – UE2	Total	BS1 - UE1	BS1 – UE4
Initial value	4.741	4.741	7.751	-131.034	-123.688
Final Value	4.813	4.813	7.823	-130.962	-123.616

Table B. 8 - BS1 powers and interferences for scenario 2

	Cell 1 (Ptx)			Cell 2 Interference	
	BS1 – UE3	BS1 – UE2	Total	BS1 - UE1	BS1 – UE4
Initial value	21.906	4.741	21.988	-116.797	-109.451
Final Value	22.315	4.819	22.392	-116.394	-109.048

Table B. 9 - BS1 powers and interferences for scenario 3

	Cell 1 (Ptx)			Cell 2 Interference	
	BS1 – UE3	BS1 – UE2	Total	BS1 - UE1	BS1 – UE4
Initial value	21.906	21.906	24.916	-113.870	-106.524
Final Value	22.349	22.349	25.359	-113.426	-106.080

Table B. 10 - BS1 powers and interferences for scenario 4

	Cell 1 (Ptx)			Cell 2 Interference	
	BS1 – UE3	BS1 – UE2	Total	BS1 - UE1	BS1 – UE4
Initial value	21.906	21.906	24.916	-106.524	-106.524
Final Value	22.751	22.751	25.761	-105.678	-105.678

Table B. 11 - BS1 powers and interferences for scenario 5

	Cell 1 (Ptx)			Cell 2 Interference	
	BS1 – UE3	BS1 – UE2	Total	BS1 - UE1	BS1 – UE4
Initial value	4.741	4.741	7.751	-131.034	-131.034
Final Value	4.744	4.744	7.754	-131.031	-131.031

Table B. 12 - BS1 powers and interferences for scenario 6

B.3 - Downlink timeslots (Base Station 2)

	Cell 1 (Ptx)			Cell 2 Interference	
	BS2 – UE4	BS2 – UE1	Total	BS2 – UE3	BS2 – UE2
Initial value	4.741	4.741	7.751	-123.688	-123.688
Final Value	4.881	4.881	7.891	-123.548	-123.548

Table B. 13 - BS2 powers and interferences for scenario 1

	Cell 1 (Ptx)			Cell 2 Interference	
	BS2 – UE4	BS2 – UE1	Total	BS2 – UE3	BS2 – UE2
Initial value	4.741	21.906	21.988	-116.797	-116.797
Final Value	4.819	21.920	22.003	-116.783	-116.783

Table B. 14 - BS2 powers and interferences for scenario 2

	Cell 1 (Ptx)			Cell 2 Interference	
	BS2 – UE4	BS2 – UE1	Total	BS2 – UE3	BS2 – UE2
Initial value	4.741	21.906	21.988	-109.451	-116.797
Final Value	21.921	22.315	22.392	-109.048	-116.394

Table B. 15 - BS2 powers and interferences for scenario 3

	Cell 1 (Ptx)			Cell 2 Interference	
	BS2 – UE4	BS2 – UE1	Total	BS2 – UE3	BS2 – UE2
Initial value	4.741	21.906	21.988	-109.451	-109.451
Final Value	4.895	22.682	22.754	-108.685	-108.685

Table B. 16 - BS2 powers and interferences for scenario 4

	Cell 1 (Ptx)			Cell 2 Interference	
	BS2 – UE4	BS2 – UE1	Total	BS2 – UE3	BS2 – UE2
Initial value	21.906	21.906	24.916	-106.524	-106.524
Final Value	22.751	22.751	25.761	-105.678	-105.678

Table B. 17 - BS2 powers and interferences for scenario 5

	Cell 1 (Ptx)			Cell 2 Interference	
	BS2 – UE4	BS2 – UE1	Total	BS2 – UE3	BS2 – UE2
Initial value	4.741	4.741	7.751	-131.034	-131.034
Final Value	4.744	4.744	7.754	-131.031	-131.031

Table B. 18 - BS2 powers and interferences for scenario 6

B.4 - Crossed timeslots

	Cell 1 (Ptx by BS1)	Cell 2 (Ptx by UE4 and UE1)
Initial Value	21.916	0.541
Final Value	25.342	17.341

Table B. 19 – Powers and interference in the crossed timeslots for scenario 1

	Cell 1 (Ptx by BS1)	Cell 2 (Ptx by UE4 and UE1)
Initial Value	7.751.	0.541 17.705
Final Value	8.193	3.337 20.501

Table B. 20 - Powers and interference in the crossed timeslots for scenario 2

	Cell 1 (Ptx by BS1)	Cell 2 (Ptx by UE4 and UE1)
Initial Value	7.751	0.541
Final Value	7.753	3.133

Table B. 21 - Powers and interference in the crossed timeslots for scenario 6

	Cell 1 (Ptx by BS1)	Cell 2 (Ptx by UE4 and UE1)
Initial Value	7.751	17.705
Final Value	8.630	20.714

Table B. 22 - Powers and interference in the crossed timeslots for scenario 7

	Cell 1 (Ptx by BS1)	Cell 2 (Ptx by UE4 and UE1)
Initial Value	21.988	0.541
Final Value	22.201	14.296

Table B. 23 - Powers and interference in the crossed timeslots for scenario 8

APPENDIX C - Pseudo-code for Algorithms 1 and 2

Algorithm INPUT:

For each user (admitted service):

- Transport Format (TF);
- Spreading Factor (SF);
- Time Advance (TA), for Time Advance criterion;
- Path Loss (PL), for Path Loss measurement criterion.

Algorithm PROCESS:

Header block:

- #define START_UL 0/*first allocated slot for uplink*/
- #define START_DL 14/*first allocated slot for downlink*/

Step 1) Computation of the switching point (SP);

- Computation of R_u (total data rate of uplink traffic);
- Computation of R_d (total data rate of downlink traffic);
- $N = N_u + N_d$;
  where N is the number of time slots in a frame (N = 15);
  N_u is the number of uplink time slots;
  N_d is the number of downlink time slots;

- $N_u \cong \frac{R_u}{R_d} \cdot N_d$;
- $SP = N_u$;

Step 2) Compute the initial slot allocation for each admitted service:

- **FOR** each User Equipment "*i*" (admitted service) compute the "slot target"

$$X_i = \begin{cases} \left(1 - \frac{TA \cdot c}{2R}\right) & \text{, for the TA criterion} \\ \left(\frac{PL_{\max} - PL}{PL_{\max} - PL_{\min}}\right) & \text{, for the PL measurement criterion} \end{cases}$$

$$Y_i = \begin{cases} \left(\frac{TA \cdot c}{2R}\right) & \text{, for the TA criterion} \\ \left(\frac{PL - PL_{\min}}{PL_{\max} - PL_{\min}}\right) & \text{, for the PL measurement criterion} \end{cases}$$

$$TS_{ij} = \begin{cases} UL_{slot} = \lfloor X_i \cdot SP \rfloor \\ DL_{slot} = SP + \lfloor Y_i \cdot (15 - SP) \rfloor \end{cases}$$

where i means User Equipment (admitted service) and j means timeslot target (j=UL_{slot} or j=DL_{slot}).

Step 3) Keep the initial allocation results in the following data structure:

- Create 15 different arrays, one for each time-slot;
- Each position of an array contains information about:
  - The user equipment allocated to the slot;
  - The SF associated with the user equipment.
- Sort the content of each array in ascending order of the SF value. This will be used by the Best Packing algorithm for the real assignment of RUs to users.

Step 4) **Execute** Best Packing algorithm:

- **FOR EACH** time-slot (array)
  - **IF** SP is not reached (UL slots)
    - **FOR EACH** user equipment (position of the array)
      - Allocate RUs within the first slot with free RUs (and continue on the next slot, if necessary), starting from the first time-slot (time slot 0);
  - **ELSE** (DL slots)
    - **FOR EACH** user equipment (position of the array)
      - Allocate RUs within the first slot with free RUs (and continue on the next slot, if necessary), starting from the last time-slot (time slot 14);

Note: the output of the Best Packing algorithm is the real allocation matrix named Best Packing Allocation Matrix (B.P.A.M.):

$$BPAM_{ij} = \begin{bmatrix} UEx & \bullet & \bullet & \bullet & UEz \\ \bullet & \bullet & & & \bullet \\ \bullet & & \bullet & & \bullet \\ \bullet & & & \bullet & \bullet \\ UEy & \bullet & \bullet & \bullet & UEw \end{bmatrix}$$

BPAM is a 16x15 matrix where UEx = (RU_x, TSi); each line corresponds to an elementary RU (one leaf code) and each column to a slot. Depending on its SF, one user (admitted service) may be allocated more than one RU (multicode operation). In this case the RUs are contiguous in one column and the allocation of RUs for the same user may continue in the adjacent column (case of multislot operation).

Step 5) **Execute** reshuffling:

- The input parameter is:
  - The BPAM matrix;
- The output is an allocation matrix that tries to minimize multislot operation.

Step 6) **IF** algorithm == 2 **THEN**
IF SP1 == SP2 **THEN**
Invert BPAM matrix for cell number 2:

- **FOR EACH** time-slot (array)
  - **IF** (UL slots)
    - Make x = TS[i];
    - Make TS[i] = TS[SP+1-i];
    - Make TS[SP+1-i] = x;
  - **ELSE** (DL slots)
    - Make x = TS[NUM_TIME_SLOTS+1-i];
    - Make TS[NUM_TIME_SLOTS+1-i] = TS[SP+i];
    - Make TS[SP+i] = x;

ELSE /*crossed slots*/

- **FOR EACH** time-slot (array)
  - **IF** (UL slots)
    - Make x = TS[i];
    - Make TS[i-1] = TS[SP1+1-i];
    - Make TS[SP1+1-i] = x;
  - **ELSE** (DL slots)
    - Make x = TS[NUM_TIME_SLOTS+1-i];
    - Make TS[NUM_TIME_SLOTS-i] = TS[SP2+i];
    - Make TS[SP2+i] = x;

Algorithm OUTPUT:

- slot allocation within a frame.

